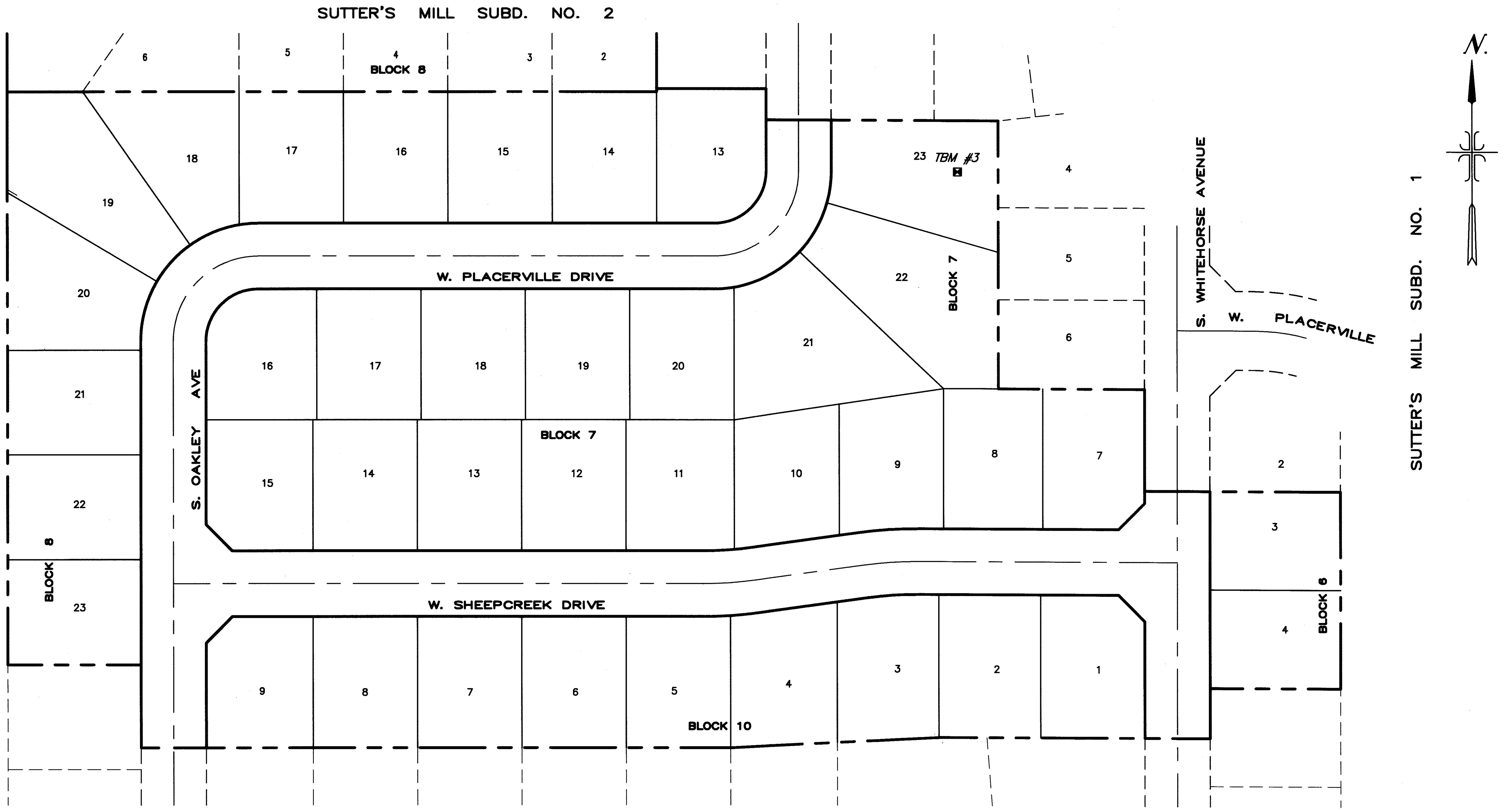

NOTES

GENERAL

1. THE LOCATIONS OF EXISTING UNDERGROUND UTILITIES ARE SHOWN IN AN APPROXIMATE WAY ONLY. THE CONTRACTOR SHALL DETERMINE THE EXACT LOCATION OF ALL EXISTING UTILITIES BEFORE COMMENCING WORK. HE AGREES TO BE FULLY RESPONSIBLE FOR ANY AND ALL DAMAGES WHICH MIGHT BE OCCASIONED BY HIS FAILURE TO EXACTLY LOCATE AND PRESERVE ANY AND ALL UNDERGROUND UTILITIES. DIGLINE TELEPHONE NUMBER 1-208-342-1585.
2. ALL LOT DIMENSIONS AND EASEMENTS SHALL BE TAKEN FROM THE PLAT OF THIS SUBDIVISION.
3. ALL WATER, SEWER AND SERVICES LINES SHALL BE INSTALLED, COMPLETE, PRIOR TO CURB, GUTTER AND SIDEWALK CONSTRUCTION.
4. CONTRACTOR SHALL OBTAIN CONSTRUCTION PERMIT FROM ADA COUNTY HIGHWAY DISTRICT (ACHD) 24 HOURS BEFORE COMMENCING CONSTRUCTION. NO CONSTRUCTION SHALL BEGIN BEFORE PRECONSTRUCTION MEETING IS HELD ACCORDING TO THE "CONSTRUCTION QUALITY ASSURANCE MANUAL". THE CONTRACTOR IS REQUIRED TO ATTEND THE PRECONSTURCTION MEETING.
5. NO PAVING SHALL OCCUR UNTIL THE CONTRACTOR OBTAINS WRITTEN APPROVAL OF ALL INSTALLED WATER, SEWER, AND PRESSURE IRRIGATION FACILITIES FROM THE CITY OF KUNA.
6. ALL CONSTRUCTION SHALL COMPLY WITH THE LATEST EDITION OF THE IDAHO STANDARDS FOR PUBLIC WORKS CONSTRUCTION (ISPWC).
7. THE STREET CONTRACTOR SHALL CLEAN UP AND FINE GRADE THE ENTIRE SUBDIVISION AT THE COMPLETION OF THE PROJECT.
8. STIMSONITE MODEL 88AB BLUE REFLECTIVE MARKER (OR APPROVED EQUAL) SHALL BE INSTALLED 6" OFF OF STREET CENTERLINE AND PERPENDICULAR TO EACH FIRE HYDRANT. IT SHALL BE LOCATED ON THE SIDE OF THE STREET NEAREST THE FIRE HYDRANT.

STREETS

1. ALL CONSTRUCTION IN THE PUBLIC RIGHT-OF-WAY SHALL CONFORM TO THE 2002 EDITION OF THE I.S.P.W.C. AND THE ACHD SUPPLEMENTAL SPECIFICATIONS. NO EXCEPTIONS TO DISTRICT POLICY, STANDARDS, AND THE I.S.P.W.C. WILL BE ALLOWED UNLESS SPECIFICALLY APPROVED IN WRITING BY THE DISTRICT.
2. STANDARD SEWER AND STORM DRAIN MANHOLES, CONES AND STRUCTURES SHALL BE SET TO SPECIFIED ELEVATION BY THEIR RESPECTIVE CONTRACTORS. ALL REMAINING MANHOLE MATERIALS, EXCEPT CONCRETE COLLARS, NECESSARY TO CONSTRUCT MANHOLE TO FINISHED GRADE IN PAVEMENT AREAS SHALL BE FURNISHED BY THE PIPE CONTRACTORS FOR PLACEMENT AT FINISHED GRADE BY STREET CONTRACTOR. FOR MANHOLES NOT WITHIN PAVEMENT AREAS, THE MANHOLE RINGS SHALL BE SET TO FINISHED GRADE BY THEIR RESPECTIVE CONTRACTORS. ALL MATERIALS FOR CONCRETE COLLARS AROUND SANITARY SEWER AND STORM DRAIN MANHOLE RINGS SHALL BE SUPPLIED AND CONSTRUCTED TO FINISHED GRADE BY STREET CONTRACTOR IN ACCORDANCE WITH ISPWC SPECIFICATIONS.
3. ALL WORK WILL BE INSPECTED BY THE ACHD IN ACCORDANCE WITH THE LATEST EDITION OF THE "CONSTRUCTION QUALITY ASSURANCE MANUAL".
4. STORM DRAIN PIPE IN STREETS SHALL UTILIZE TYPE I BEDDING MATERIAL, PLACED N 6" LAYERS AS PER ACHD TYPICAL TRENCH DETAIL, DRAWING NO. SD-301. THE PIPE SHALL BE HDPE, ADS N-12 OR EQUAL.
5. CONCRETE CONTRACTOR SHALL CALL BRIGGS ENGINEERING, INC. (BEI) AT LEAST 24 HOURS IN ADVANCE FOR STRING LINE INSPECTION PRIOR TO POURING ANY CONCRETE. THIS INSPECTION BY BEI DOES NOT RELIEVE THE CONTRACTOR FROM THE RESPONSIBILITY OF COMPLYING WITH THE INTENT OF THE PLANS AND SPECIFICATIONS.
6. THE STREET CONTRACTOR SHALL BACKFILL ALL SIDEWALKS AT THE COMPLETION OF THE PAVING.

LEGEND

Symbol	Description
	PROPERTY BOUNDARY LINE
	EXISTING PROPERTY BOUNDARY LINE
	RIGHT-OF-WAY LINE
	EXISTING RIGHT-OF-WAY LINE
	FUTURE RIGHT-OF-WAY LINE
	SECTION LINE
12+00	CENTERLINE WITH STATIONING
	EXISTING CENTERLINE
	LOT LINE
	EXISTING LOT LINE
	FUTURE LOT LINE
	EXISTING DRIVE
	EXISTING DITCH
GIRR	GRAVITY IRRIGATION LINE WITH MANHOLE
	EXISTING GRAVITY IRRIGATION LINE
PIRR	PRESSURE IRRIGATION LINE WITH SERVICE
PIRR	EXISTING PRESSURE IRRIGATION LINE WITH SERVICE
	PRESSURE IRRIGATION CAP/PLUG
	PRESSURE IRRIGATION VALVE
PIRR	PRESSURE IRRIGATION AIR RELEASE
	PRESSURE IRRIGATION MAIN LINE DRAIN
18"SD	STORM DRAIN LINE
24"SD	EXISTING STORM DRAIN LINE WITH MANHOLE
	INLET CATCH BASIN
	1500-GALLON SAND AND GREASE TRAP
	STORM DRAIN PIPE END SECTION
	RIP RAP
	DIRECTION OF FLOW
2682	EXISTING 2' CONTOUR
2680	EXISTING 10' CONTOUR
2600.00 / 23+54.14	TBC ELEVATION WITH CENTERLINE STATION
	VALLEY GUTTER
	STREET LIGHT
	BARRICADE
	EXISTING BARRICADE
	ROLL CURB, GUTTER AND SIDEWALK
	PEDESTRIAN RAMP (PER ISPWC STANDARD DRAWING NO. SD-712B)
x x	EXISTING FENCE
	SIGN
8"S	SANITARY SEWER LINE WITH MANHOLE
SS	EXISTING SANITARY SEWER LINE WITH MANHOLE
8"S	SANITARY SEWER CLEAN-OUT
SS	EXISTING SANITARY SEWER CLEAN-OUT
8"S	SANITARY SEWER SERVICES
8"W	WATER LINE
10"W	EXISTING WATER LINE
	BLOW-OFF
	WATER VALVE
	EXISTING WATER VALVE
	FIRE HYDRANT
	EXISTING FIRE HYDRANT
	THRUST BLOCK
	EXISTING THRUST BLOCK
	SINGLE METER WATER SERVICE
	EXISTING SINGLE METER WATER SERVICE
P	EXISTING POWER LINE
	EXISTING UTILITY POLE
W/Tran	EXISTING UTILITY POLE WITH TRANSFORMERS
	EXISTING GUY WIRE
	EXISTING TELEPHONE RISER
24"	EXISTING TREE
	TEMPORARY BENCHMARK

WATER DISTRIBUTION

1. ALL WATER LINES SHALL BE CONSTRUCTED IN ACCORDANCE WITH THE "IDAHO RULES FOR PUBLIC DRINKING WATER SYSTEMS, MARCH, 1995 (IDAPA 16.01.08), THE LATEST EDITION OF THE IDAHO STANDARDS FOR PUBLIC WORKS CONSTRUCTION, UNIFORM PLUMBING CODE, AND LAWS OF THE STATE OF IDAHO.
2. CONTRACTOR SHALL NOTIFY KUNA CITY AND THE DEVELOPER'S ENGINEER 72 HOURS BEFORE CONSTRUCTION BEGINS. THE KUNA CITY AND THE DEVELOPER'S ENGINEER SHALL BE ALLOWED TO INSPECT WATER LINES BEFORE BACKFILLING.
3. TRENCH BACKFILL ABOVE THE PIPE ZONE WILL BE INSPECTED BY THE ADA COUNTY HIGHWAY DISTRICT AND SHALL MEET THEIR MATERIAL AND COMPACTION REQUIREMENTS.
4. ALL WATER MAINS SHALL BE POLY-VINYL-CHLORIDE (PVC) CONFORMING TO THE PROVISIONS OF AWWA C-900, CLASS 150, SDR 18, OR CLASS 150 CEMENT MORTAR LINED DUCTILE IRON CONFORMING TO AWWA C-104 AND AWWA C-151. ALL FITTINGS SHALL BE MECHANICAL JOINT DUCTILE IRON FITTINGS CONFORMING TO AWWA C-110. ALL PLASTIC PIPE SHALL BE INSTALLED WITH A #12 DIRECT BURIAL TRACER WIRE PLACED ALONG THE NORTH AND EAST SIDE OF THE MAIN. THE TRACER WIRE SHALL BE ACCESSIBLE AT ALL VALVE BOXES AND SHALL BE EXTENDED ALONG THE OUTSIDE OF THE LOWER PORTION OF THE VALVE BOX AND ALONG THE INSIDE OF THE UPPER PORTION. MINIMUM BURIAL DEPTH FOR ALL WATER MAINS SHALL BE 4 FEET FROM FINISH GRADE TO THE TOP OF PIPE.
5. ALL MAIN LINE WATER VALVES SHALL BE RESILIENT-SEATED GATE VALVES CONFORMING TO AWWA C-509. ALL WATER VALVES SHALL BE FURNISHED WITH A STANDARD CAST IRON 5-1/4 INCH DIAMETER ADJUSTABLE VALVE BOX. THE CAST IRON COVER SHALL BE MARKED WITH THE WORD "WATER" AS AN INTEGRAL PART OF THE COVER.
6. ALL FIRE HYDRANTS SHALL BE DRY BARREL FIRE HYDRANTS CONFORMING TO AWWA C-502. HYDRANTS SHALL HAVE A 5-FOOT SETTING; MINIMUM 5-1/4 INCH VALVE OPENING; 150 PSI WORKING PRESSURE; ONE 4-1/2 INCH DIAMETER NATIONAL STANDARD PUMPER NOZZLE; AND TWO 2-1/2 INCH DIAMETER NATIONAL STANDARD THREAD FIRE HOSE NOZZLES. THE VALVE OPERATOR SHALL OPEN LEFT (COUNTERCLOCKWISE). THE HYDRANT SHALL BE EQUIPPED WITH A BREAKABLE TRAFFIC FLANGE JUST ABOVE-GROUND LEVEL; A DRAIN THAT AUTOMATICALLY OPENS WHEN THE HYDRANT IS CLOSED; AND A 6-INCH FLANGED CONNECTION. THE HYDRANT SHALL BE EQUIPPED WITH A 6-INCH FLANGED BY MECHANICAL JOINT RESILIENT-SEAT GATE VALVE WITH CAST IRON VALVE BOX ATTACHED DIRECTLY TO THE MAIN LINE TEE. FIRE HYDRANTS SHALL BE INSTALLED SUCH THAT THE BREAKABLE TRAFFIC FLANGE IS SET 2-INCHES MINIMUM, 6-INCHES MAXIMUM ABOVE THE BACK OF SIDEWALK OR FINISH GRADE, AS APPLICABLE . HYDRANT SPACING SHALL BE 450'. APPROVED FIRE HYDRANTS ARE CLOW MEDALLION, WATEROUS PACER 100, AND MUELLER A423. NO OTHER MODELS ARE ALLOWED.
7. INDIVIDUAL WATER SERVICES SHALL BE INSTALLED FOR EACH CONNECTION. THE WATER SERVICE SHALL CONSIST OF A PIPE SADDLE WITH 1-INCH CORPORATION STOP; 1-INCH CLASS 200, SDR 7.3 POLYETHYLENE PIPE CONFORMING TO AWWA C-901; 18-INCH TALL 5/8"X3/4" COPPER METER SETTER WITH LOCKABLE SHUTOFF VALVE; INTEGRAL CHECK VALVE; 10-FOOT LONG STUB 1-INCH PIPE AT CUSTOMER SIDE. 18-INCH DIAMETER BY 30-INCH TALL METER BOX WITH CAST IRON FRAME AND COVER APPROVED BY THE CITY. COVER SHALL HAVE 1-INCH HOLE, FOR INSTALLATION OF AUTO-READ SENSOR (BY OTHERS). METER BOX SHALL BE INSULATED, SIMILAR TO MID STATES PLASTIC "THERMO PACK".
8. MULTIPLE TAPS IN THE SAME PIPE JOINT SHALL BE STAGGERED AND SHALL BE SEPARATED BY A MINIMUM OF ONE FOOT. THE CENTERLINE OF THE METER SETTER SHALL BE LOCATED 18-INCHES BELOW FINISH GRADE. METERS SHALL BE PLACED 18 INCHES INSIDE THE PROPERTY LINE OR ACHD EASEMENT, OR A MINIMUM OF 18" BEHIND MAILBOX CLUSTERS AND 18-INCHES AWAY FROM THE SIDE LOT LINE. DUAL SERVICES OFF ONE SERVICE LINE WILL NOT BE ALLOWED.
9. ALL INSTALLED WATER LINES SHALL BE TESTED FOR LEAKAGE IN ACCORDANCE WITH SECTION 404 OF THE ISPWC SPECIFICATIONS FOLLOWING INSTALLATION OF ALL UTILITIES AND PRIOR TO PAVING. EACH METER SETTER SHALL BE OPENED TO VERIFY THAT THE CORPORATION STOP IS OPEN AND THE SERVICE IS FUNCTIONAL PRIOR TO PAVING.
THE TESTING MUST BE OBSERVED BY A REPRESENTATIVE OF THE CITY. ALL INSTALLED WATER LINES SHALL BE DISINFECTED IN ACCORDANCE WITH SECTION 405 OF THE ISPWC SPECIFICATIONS AND SATISFACTORILY PASS A BACTERIOLOGICAL TEST CONDUCTED BY THE CITY PRIOR TO BEING PUT INTO SERVICE.
10. ALL PIPE, MAINS AND SERVICES, SHALL BE BEDDED WITH TYPE I BEDDING. IN AREAS OF ROCK EXCAVATION BEDDING SHALL BE 6-INCHES BELOW THE PIPE.
11. IN AREAS WHERE ROCK EXCAVATION IS REQUIRED ALL BLASTING FOR OTHER UTILITIES SHALL OCCUR PRIOR TO INSTALLATION OF ANY SEWER MAINS, WATER MAINS OR SERVICE LINE CROSSINGS.
12. ALL TEES, PLUGS, CAPS AND BENDS OF 22 1/2 AND AT OTHER LOCATIONS WHERE UNBALANCED FORCES WILL EXIST SHALL BE SECURED AND ANCHORED BY SUITABLE THRUST BLOCKING.
13. WHEN CONSTRUCTION IS SATISFACTORILY COMPLETED, CLEANED AND TESTED THE CONTRACTOR SHALL REQUEST A FINAL ACCEPTANCE INSPECTION BY THE CITY. THE FINAL ACCEPTANCE INSPECTION SHALL OCCUR AFTER ALL OTHER UTILITIES ARE INSTALLED. AT A MINIMUM, THE FINAL ACCEPTANCE INSPECTION SHALL CONSIST OF WITNESSING A FINAL WATER PRESSURE TEST CONDUCTED BY THE CONTRACTOR.
14. THE CITY HAS THE RIGHT TO INSPECT THE WORK AT ANY TIME DURING CONSTRUCTION. ANY WORK THAT DOES NOT CONFORM THE APPROVED PLANS AND SPECIFICATIONS SHALL BE REJECTED.
15. THE DEVELOPER AND CONTRACTOR SHALL GUARANTEE ALL WORK FOR A PERIOD OF ONE YEAR FOLLOWING ACCEPTANCE BY THE CITY.

NOTES

SANITARY SEWER

1. PRIOR TO CONSTRUCTION, IT SHALL BE THE RESPONSIBILITY OF THE CONTRACTOR TO INFORM ALL THE UTILITY COMPANIES OF THE CONSTRUCTION SCHEDULE.
2. ALL UTILITY LOCATIONS AND DEPTHS ARE APPROXIMATE.
3. ALL ELEVATIONS ARE BASED ON U.S.G.S. DATUM.
4. MANHOLE RIM ELEVATIONS AS SHOWN ON THE CONSTRUCTION DRAWINGS ARE APPROXIMATE. THE MANHOLE FRAMES AND COVERS SHALL BE CONSTRUCTED IN ACCORDANCE WITH ACHD'S REVISION TO THE I.S.P.W.S. STANDARD DRAWING NO. SD 508.
5. CONTRACTOR SHALL REPAVE ANY EXISTING PAVED STREETS DISTURBED DURING CONSTRUCTION.
6. RETAIN AND PROTECT ALL IRRIGATION AND DRAINAGE PIPE CROSSINGS. THE CONTRACTOR SHALL COORDINATE WITH THE OWNER AND THE ACHD FOR THE INSPECTION OF THE EXPOSED IRRIGATION AND/OR DRAINAGE PIPE CROSSINGS. IF EXISTING PIPES ARE DAMAGED, THE AFFECTED PIPE WILL BE REPLACED BY THE CONTRACTOR.
7. RETAIN AND PROTECT WATER METER VAULTS. IF THE VAULTS ARE DISTURBED, THE CONTRACTOR SHALL CONTACT THE APPROPRIATE WATER COMPANY FOR REPLACEMENT.
8. RETAIN AND PROTECT EXISTING CURB, GUTTER AND SIDEWALK. IF REMOVAL IS NECESSARY, REPLACEMENT SHALL BE INCIDENTAL TO THE PROJECT.
9. THE FOLLOWING TYPE AND CLASS OF PIPE WILL BE PERMITTED: PIPE SHALL CONFORM TO A.S.T.M. D 3034 P.V.C., SDR 35.
10. ALL WORK SHALL BE CONSTRUCTED TO I.S.P.W.C. STANDARDS, UNIFORM PLUMBING CODE, LAWS OF THE STATE OF IDAHO AND SHALL BE APPROVED BY KUNA CITY.
11. THE SEWER CONTRACTOR SHALL OBTAIN A STREET EXCAVATION PERMIT.
12. SEWER MANHOLES SHALL BE TYPE "A".
13. SANITARY SEWER MANHOLES SHALL BE CONSTRUCTED OF REINFORCED PRECAST CONCRETE 4' DIAMETER WITH CONE, MAXIMUM 12" OF CONCRETE GRADE RINGS AND 24" C.I. RING AND COVER. MANHOLE REINFORCING AND STRENGTH REQUIREMENTS SHALL CONFORM TO A.S.T.M. C-478 SPECIFICATIONS.
14. AN ECCENTRIC CONE SHALL BE PLACED ON SANITARY SEWER MANHOLES GREATER THAN 4 FEET DEEP, WITH THE VERTICAL WALL PLACED ON THE UPSTREAM SIDE AND ROTATED 45 . MANHOLES LESS THAN 4 FEET DEEP SHALL HAVE CONCENTRIC CONES. MANHOLES OVER 4' DEEP SHALL HAVE STEPS.
15. SANITARY SEWER MANHOLE CONES SHALL BE SET A MAXIMUM OF ONE (1) FOOT BELOW SPECIFIED RING ELEVATIONS BY SEWER CONTRACTOR. ALL REMAINING MANHOLE MATERIALS, OTHER THAN CONCRETE COLLARS NECESSARY TO CONSTRUCT MANHOLE TO FINISHED GRADE, SHALL BE FURNISHED BY THE SEWER CONTRACTOR FOR PLACEMENT AT FINISHED GRADE BY STREET PAVING CONTRACTOR. ALL MATERIALS FOR CONCRETE AROUND MANHOLE RINGS SHALL BE SUPPLIED AND CONSTRUCTED TO FINISHED GRADE BY STREET CONTRACTOR. THE CITY OF KUNA SHALL BE CONTACTED 24 HOURS PRIOR TO PLACING CONCRETE COLLARS.
16. THE TRENCH BACKFILL ABOVE THE PIPE ZONE WILL BE INSPECTED BY THE ACHD OR BY THE OWNER'S ENGINEER IN ACCORDANCE WITH THE LATEST EDITION OF THE "CONSTRUCTION QUALITY ASSURANCE MANUAL".
17. WHERE PVC IS UTILIZED, A RUBBER RING OR APPROVED EQUIVALENT IS TO BE INSTALLED WHERE THE PIPE CONTACT WITH MANHOLE BASE AND/OR MANHOLE CHANNEL IN ORDER TO INSURE A WATERTIGHT SEAL.
18. WHERE IT IS NECESSARY FOR SEWER AND WATER TO CROSS EACH OTHER AND THE SEWER LINE IS ABOVE OR LESS THAN 18 INCHES BELOW THE WATER MAIN, THE SEWER LINE CROSSING SHALL BE IN ACCORDANCE WITH SECTION 405 OF THE 2000 EDITION OF THE I.S.P.W.C.
19. WHERE THE SEWER MAIN DEPTH WILL ALLOW, ALL SEWER SERVICE LINES SHALL BE CONSTRUCTED TO A DEPTH OF 6.5' AT PROPERTY LINE. THE CONTRACTOR SHALL USE 4" DIAMETER PVC PIPE OR APPROVED EQUIVALENT FOR ALL SERVICES LINES. ALL SEWER SERVICE LINES SHALL BE CONSTRUCTED AT A MINIMUM GRADE OF 1%.
20. SEWER SERVICE LINES SHALL BE CONSTRUCTED TO A POINT 10' INSIDE THE BACK OF PROPERTY LINE AS SHOWN. EXCEPT WHERE OTHERWISE INDICATED, THE SEWER SERVICE LINES SHALL BE CONSTRUCTED TO THE MIDPOINT OF THE FRONT LOT LINES. A 2" X 4" MARKER WITH GALVANIZED FINDER WIRE SHALL EXTEND FROM THE END OF EACH SERVICE LINE TO THE FINISHED GROUND SURFACE DIRECTLY ABOVE AND MUST BE PRESENT FOR FINAL INSPECTION INSPECTION (SEE DETAIL). AN ALTERNATE TO GALVANIZED FINDER WIRE MAY BE USED SUBJECT CITY APPROVAL PRIOR TO INSTALLATION.
21. KUNA CITY AND THE DEVELOPER'S ENGINEER WILL PROVIDE PERIODIC INSPECTION FROM 8:00 A.M. TO 5:00 P.M. DURING A FIVE-DAY WORK-WEEK. THE CONTRACTOR SHALL REIMBURSE THE CITY AND ENGINEER AT RATES EXCESS OF THE NORMAL WORK WEEK, INCLUDING LEGAL HOLIDAYS. OVERTIME RATES AND A LIST OF LEGAL HOLIDAYS CAN BE OBTAINED FROM THE KUNA CITY.
22. THE HORIZONTAL SEPARATION OF THE WATER AND SEWER MAINS SHALL BE A MINIMUM OF TEN (10) FEET.
23. CONTRACTOR SHALL NOTIFY KUNA CITY AND THE DEVELOPERS' ENGINEER 48 HOURS IN ADVANCE OF CONSTRUCTION.
24. WATER LEVELS SHALL BE MAINTAINED BELOW THE TRENCH BOTTOM DURING THE PIPE LAYING AND JOINING OPERATION. THE DEWATERING METHOD SHALL BE DISCUSSED WITH THE ENGINEER AND APPROVED PRIOR TO CONSTRUCTION. DITCHES AND STORM DRAIN FACILITIES THAT ARE SILTED UP DUE TO THE CONTRACTOR'S DEWATERING SHALL BE CLEANED AND RESTORED TO THEIR ORIGINAL STATE.
25. CONTRACTOR SHALL LOCATE AND PROTECT ALL UNDERGROUND UTILITIES DURING CONSTRUCTION.
26. COMPACTION TESTING OF THE SEWER PIPELINE BEDDING WILL BE DONE BY AN OUTSIDE TESTING LABORATORY. THE COST OF THIS SERVICE SHALL BE PAID BY THE DEVELOPER. HOWEVER, IF THE TEST FAILS, THE COST OF THE TEST AND ANY RETESTING SHALL BE PAID BY THE CONTRACTOR. THE CONTRACTOR SHALL COORDINATE WITH THE DEVELOPER'S ENGINEER AND THE TESTING LABORATORY TO SCHEDULE THE TESTS, HIS BACKFILLING, AND PIPE LAYING OPERATION.
27. AFTER ALL UTILITIES ARE CONSTRUCTED AND JUST PRIOR TO PAVING, THE CONTRACTOR SHALL PERFORM AN AIR TEST ON THE SEWER SYSTEM IN ACCORDANCE WITH SECTION 506 OF THE ISPWC SPECIFICATIONS. A KUNA CITY REPRESENTATIVE SHALL BE PRESENT TO WITNESS THE TEST. THE CONTRACTOR SHALL CONTACT KUNA CITY 24 HOURS PRIOR TO TESTING. DEFLECTION TESTS AND/OR TELEVISION INSPECTION MAY BE REQUIRED AT THE OPTION OF THE CITY.
28. WHERE SEWER TAP CONNECTS TO EXISTING MAIN (P.V.C.), HOLE SHALL BE CUT WITH A HOLE SAW. THE CONTRACTOR MAY USE A SADDLE OR "INSTA-TEE" TO MAKE TAP. A KUNA CITY INSPECTOR MUST BE PRESENT TO WITNESS THE SEWER TAP.
29. THE CONTRACTOR SHALL LEAVE THE EXCAVATION FOR THE UPSTREAM END OF ALL SERVICE LINES OPEN FOR FIELD VERIFICATION OF THE INVERT ELEVATION BY THE ENGINEER'S INSPECTOR. THE CONTRACTOR SHALL NOT BACKFILL THE ENDS OF SERVICE LINES UNTIL HE HAS OBTAINED APPROVAL FROM THE CITY OF KUNA INSPECTOR OR MADE OTHER ARRANGEMENTS FOR VERIFICATION OF SERVICE LINE INVERT ELEVATIONS.
30. WHEN CONSTRUCTION IS SATISFACTORILY COMPLETED, CLEANED AND TESTED THE CONTRACTOR SHALL REQUEST A FINAL ACCEPTANCE INSPECTION BY THE CITY. THE FINAL ACCEPTANCE INSPECTION SHALL OCCUR AFTER ALL UTILITIES ARE INSTALLED. AT A MINIMUM, THE FINAL ACCEPTANCE INSPECTION SHALL CONSIST OF LAMPING ALL SEWER MAINS, VISUALLY INSPECTING EACH MANHOLE AND WITNESSING A FINAL SEWER AIR TEST CONDUCTED BY THE CONTRACTOR.
31. THE CITY HAS THE RIGHT TO INSPECT THE WORK AT ANY TIME DURING CONSTRUCTION. ANY WORK THAT DOES NOT CONFORM TO THE APPROVED PLANS AND SPECIFICATIONS SHALL BE REJECTED.
32. THE CONTRACTOR SHALL GUARANTEE ALL WORK FOR A PERIOD OF ONE YEAR FOLLOWING ACCEPTANCE BY THE CITY.
33. ALL PIPES, MAINS AND SERVICES SHALL BE BEDDED WITH TYPE I BEDDING. IN AREAS OF ROCK EXCAVATION, BEDDING SHALL BE 6-INCHES BELOW THE PIPE.
34. IN AREAS WHERE ROCK EXCAVATION IS REQUIRED, ALL BLASTING FOR OTHER UTILITIES SHALL OCCUR PRIOR TO INSTALLATION OF ANY SEWER MAINS, WATER MAINS OR SERVICE LINE CROSSINGS.

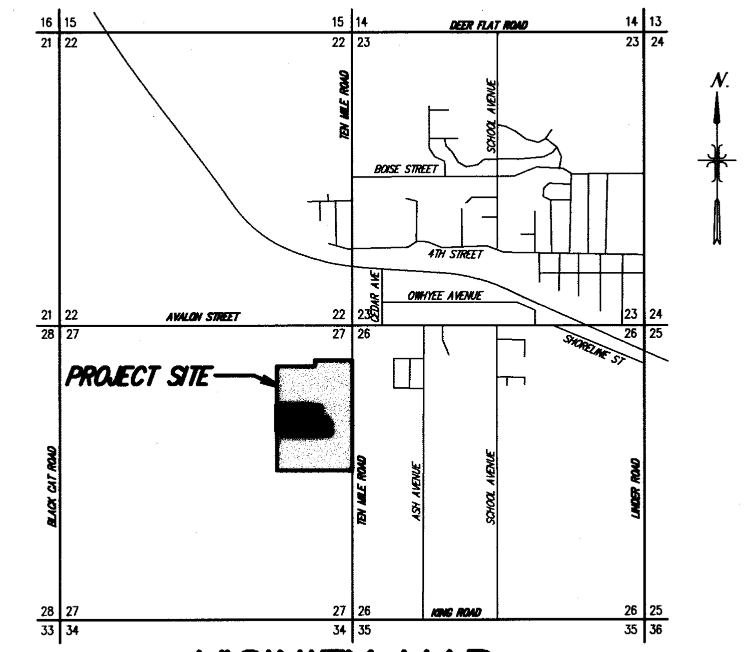

VICINITY MAP

N.T.S.

A RESUBDIVISION OF A PORTION OF LOTS 3, 4, AND 5,
RADER AND KROEGER'S SUBDIVISION,
LYING IN THE NE 1/4, SECTION 27, T.2N., R.1W., B.M.,
KUNA, ADA COUNTY, IDAHO

ABBREVIATIONS

ACHD	=	ADA COUNTY HIGHWAY DISTRICT
BB	=	BACK OF CURB TO BACK OF CURB
B.M.	=	BENCHMARK
CONC.	=	CONCRETE
DI	=	DROP INLET
ELEV.	=	ELEVATION
EP	=	EDGE OF PAVEMENT
GB	=	GRADE BREAK
GIRR	=	GRAVITY IRRIGATION
HP	=	HIGH POINT
INV.	=	INVERT
I.S.P.W.C.	=	IDAHO STANDARDS FOR PUBLIC WORKS CONSTRUCTION
LF	=	LINEAR FEET
LP	=	LOW POINT
LT	=	LEFT
MH	=	MANHOLE
NTS	=	NOT TO SCALE
PIRR	=	PRESSURE IRRIGATION
R	=	RADIUS
RT	=	RIGHT
R/W	=	RIGHT-OF-WAY
S	=	SLOPE
SD	=	STORM DRAIN
SEC.	=	SECTION
SG	=	SAND AND GREASE TRAP
SI	=	SANITARY SEWER SERVICE INVERT
SL	=	SANITARY SEWER SERVICE LENGTH
SS	=	SANITARY SEWER
SS	=	SANITARY SEWER SERVICE STATION
SSMH	=	SANITARY SEWER MANHOLE
STA.	=	STATION
SW	=	SIDEWALK
TBANK	=	TOP OF BANK
TBM	=	TEMPORARY BENCHMARK
TYP.	=	TYPICAL
W	=	WATER

RECORD DOCUMENTS

These Record Documents are based upon the marked-up record drawings, addenda, change orders, and other data furnished by the Contractor and/or public agencies. These Record Documents show significant changes made during construction. Because these Record Documents are based on unverified information provided by other parties, which the Consultant will assume to be reliable, the Consultant cannot and does not warrant their accuracy, except for that information verified by the Engineer.

Signature: [signature] Date: 9/11/03

APPROVED FOR CONSTRUCTION
DATE: APRIL 11, 2003

SHEET INDEX

SHEET NO.			DESCRIPTION
1 OF 8	T-1	=	TITLE SHEET
2 OF 8	ST-1	=	STREET AND STORM DRAIN PLAN
3 OF 8	ST-2	=	STREET PROFILES
4 OF 8	SS-1	=	SANITARY SEWER AND WATER PLAN
5 OF 8	SS-2	=	SANITARY SEWER PROFILES
6 OF 8	IRR-1	=	IRRIGATION PLAN AND DETAILS
7 OF 8	DT-1	=	STREET, STORM DRAIN & IRRIGATION DETAILS
8 OF 8	DT-2	=	SANITARY SEWER AND WATER DETAILS

REVISION :	BY:
01/31/03	BPT
02/24/03	BPT
03/20/03	SFT
04/11/03	BPT

PROFESSIONAL ENGINEER REGISTERED 10062 STATE OF IDAHO BENJAMIN P. THOMAS

BRIGGS ENGINEERING, INC.
BRIGGS INC.
ENGINEERS PLANNERS SURVEYORS
1800 W. OVERLAND ROAD * BOISE, IDAHO 83705 * (208)344-9700

These drawings, or any portion thereof, shall not be used on any Project or extensions of this Project except by written agreement from Briggs Engineering, Inc.

SUTTER'S MILL NO. 3 SUBDIVISION

TITLE SHEET

DWG DATE: 12/27/02 SFT | DWG NO. 20504-CVR | SCALE: 1" = 60'

SHEET : 1 OF 8

T-1

\20504-CVR. sft

RECORD DRAWINGS

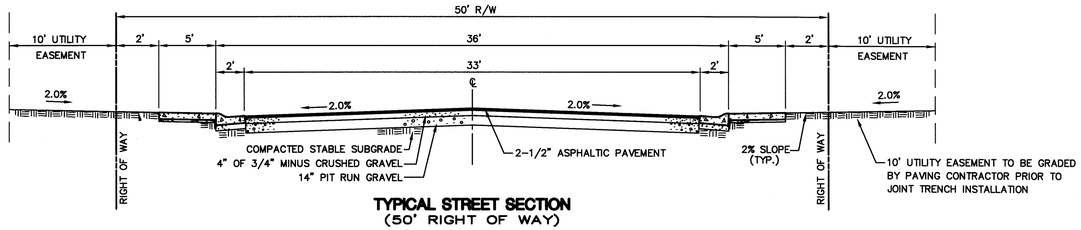

TYPICAL STREET SECTION
(50' RIGHT OF WAY)

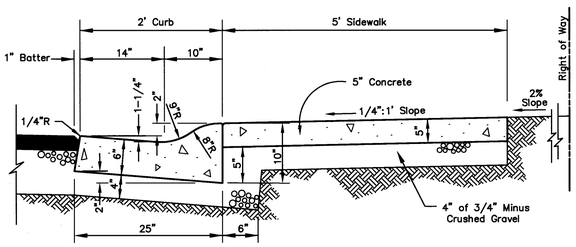

TYPICAL ROLL CURB AND SIDEWALK DETAIL

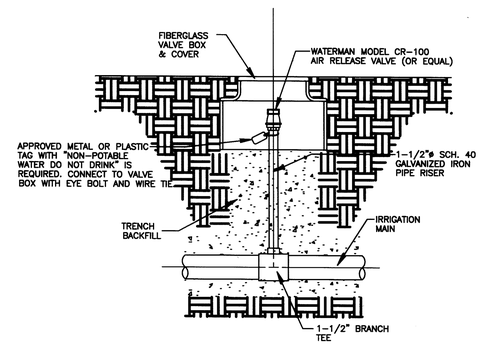

SCALE: NONE

CIVIL SURVEY CONSULTANTS
P.O. BOX 39
1530 W. STATE STREET
MERIDIAN, IDAHO 83680

CITY OF KUNA
PRESSURE IRRIGATION SYSTEM
MAIN LINE AIR RELEASE

STD. DWG. IRRIG-01
DATE: 4/18/99
CAD FILE: IRRIG-01.DWG

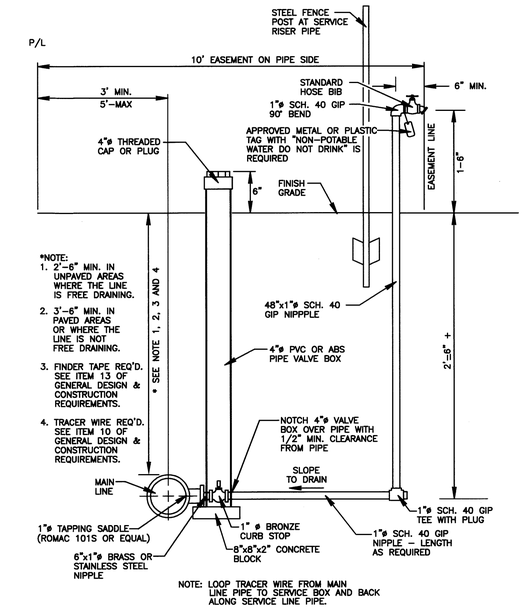

CIVIL SURVEY CONSULTANTS
100 SOUTH ADKINS WAY
SUITE 101
MERIDIAN, IDAHO 83642

CITY OF KUNA
PRESSURE IRRIGATION SYSTEM
TYPICAL LOT SERVICE

STD. DWG. IRRIG-02
DATE: 6/13/01
CAD FILE: IRRIG-02.DWG

RECORD DOCUMENTS

These Record Documents are based upon the marked-up record drawings, addenda, change orders, and other data furnished by the Contractor and/or public agencies. These Record Documents show significant changes made during construction. Because these Record Documents are based on unverified information provided by other parties, which the Consultant will assume to be reliable, the Consultant cannot and does not warrant their accuracy, except for that information verified by the Engineer.

Signature — Date: 9/16/03

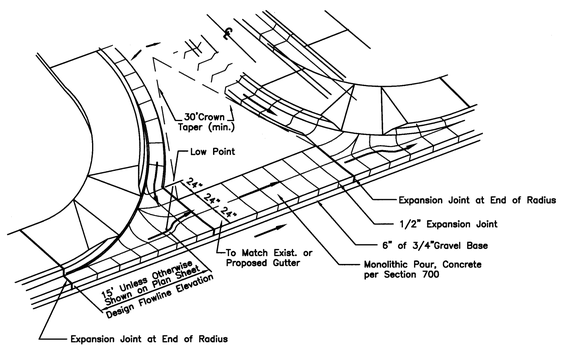

VALLEY GUTTER DETAIL
PER I.S.P.W.C. SD-716

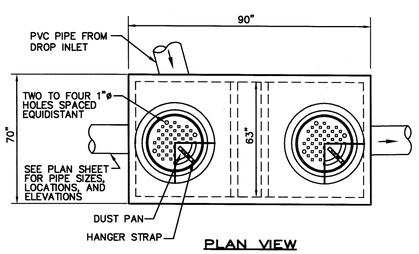

PLAN VIEW

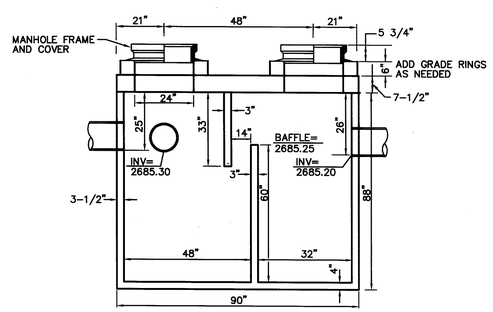

SECTION VIEW

NOTES
1. SEE PLAN SHEETS FOR PIPE SIZES, ELEVATIONS, AND LOCATIONS
2. 1500 SAND AND GREASE TRAP SHALL BE DESIGNED TO SUPPORT AN HS-25 TRAFFIC LOAD.

1500 GALLON SAND AND GREASE TRAP DETAIL (SG#1)
(TRAFFIC RATED)

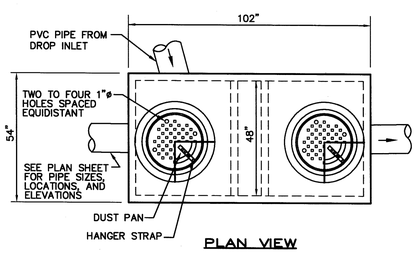

PLAN VIEW

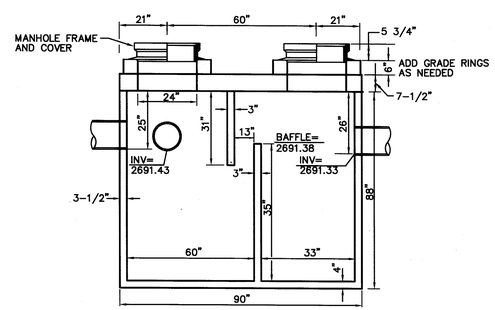

SECTION VIEW

NOTES
1. SEE PLAN SHEETS FOR PIPE SIZES, ELEVATIONS, AND LOCATIONS
2. 1000 SAND AND GREASE TRAP SHALL BE DESIGNED TO SUPPORT AN HS-25 TRAFFIC LOAD.

1000 GALLON SAND AND GREASE TRAP DETAIL (SG#2)
(TRAFFIC RATED)

NOTE: INSTALL MAIN LINE DRAINS AS REQUIRED TO PROVIDE COMPLETD DRAINAGE DURING WINTER SHUT DOWN OF IRRIGATION SYSTEM.

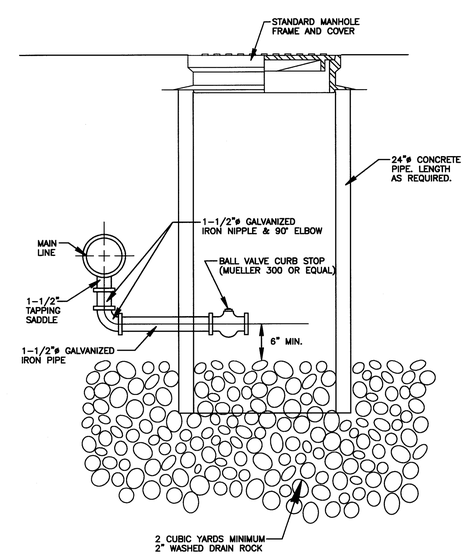

CIVIL SURVEY CONSULTANTS
P.O. BOX 39
1530 W. STATE STREET
MERIDIAN, IDAHO 83680

CITY OF KUNA
PRESSURE IRRIGATION SYSTEM
TYPICAL MAIN LINE DRAIN

STD. DWG. IRRIG-03
DATE: 4/18/99
CAD FILE: IRRIG-03.DWG

APPROVED FOR CONSTRUCTION
DATE: APRIL 11, 2003

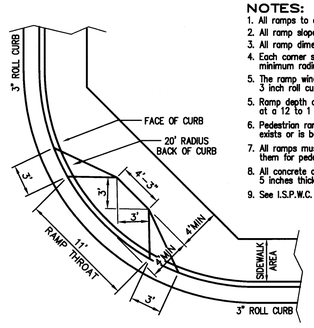

PLAN VIEW

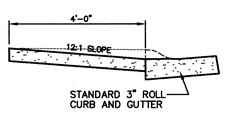

CROSS SECTION VIEW

PEDESTRIAN RAMP TYPE "B"

NOTES:
1. All ramps to conform to American Disabilities Act Standards.
2. All ramp slopes shall be no steeper than 12 to 1.
3. All ramp dimensions based on 3 inch curb heights.
4. Each corner shall have one ramp centered in the radius, and have a minimum radius of 20 feet measured at the top back curb.
5. The ramp wings must be 3 feet measured at face of curb for standard 3 inch roll curb.
5. Ramp depth and wing length for other type of curbs shall be calculated at a 12 to 1 slope from the flowline of the gutter.
6. Pedestrian ramps to be placed at all intersection radii where sidewalk exists or is being placed. Sidewalk size to be 4 foot minimum width.
7. All ramps must have a minimum 4 foot wide continuous path behind them for pedestrians.
8. All concrete adjoining the radius within and around the ramps shall be 5 inches thick with 4 inches of 3/4" aggregate base.
9. See I.S.P.W.C. Drawing No. SD-715B for additional notes.

REVISION :	BY:
02/25/03	BPT
03/20/03	SFT
04/11/03	BPT

PROFESSIONAL ENGINEER REGISTERED 10062 STATE OF IDAHO BENJAMIN P. THOMAS

BRIGGS ENGINEERING, INC.
ENGINEERS PLANNERS SURVEYORS
1800 W. OVERLAND ROAD • BOISE, IDAHO 83705 • (208)344-9700

These drawings, or any portion thereof, shall not be used on any Project or extensions of this Project except by written agreement from Briggs Engineering, Inc.

SUTTER'S MILL SUBDIVISION NO. 3

STREET, STORM DRAIN & IRRIGATION DETAILS

SCALE: N.T.S.
DWG NO. 20504-DTL
DWG DATE: 12/27/02 SFT

SHEET : 7 OF 8

DT-1

\20504-DTL. sft

RECORD DRAWINGS

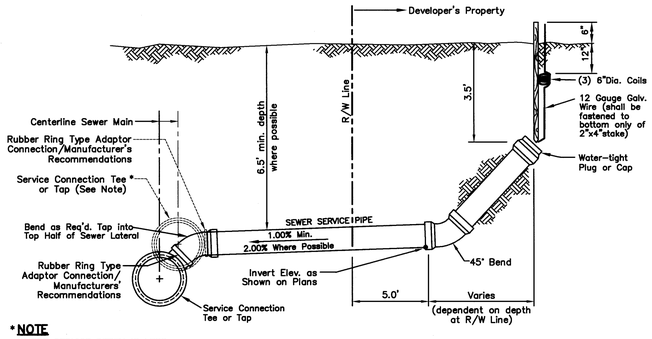

*NOTE
WHERE SERVICE DEPTH IS LESS THAN 4 FEET AT RIGHT OF WAY LINE INSTALL SERVICE PIPE AT CENTER OF SAN. SEWER MAIN AS SHOWN.

TYPICAL SEWER SERVICE AND MARKER

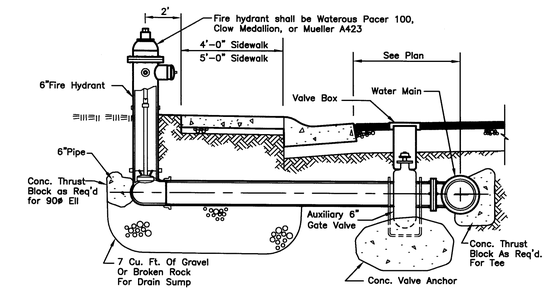

FIRE HYDRANT ASSEMBLY

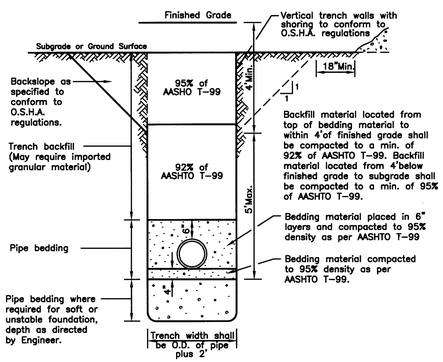

TYPICAL TRENCH DETAIL

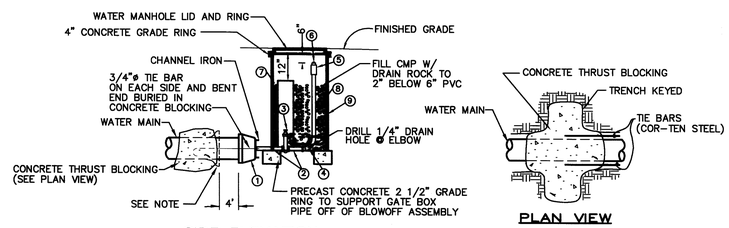

SIDE ELEVATION

PLAN VIEW

EQUIPMENT LEGEND

1. MAIN SIZE M.J. CAP WITH 2" IRON PIPE THREAD OUTLET
2. 2"x6" GALVANIZED NIPPLE (THREADED)
3. 2" RESILIENT WEDGE SCREWED GATE VALVE OR APPROVED EQUAL
4. 2" GALVANIZED 90° ELBOW, THREADED W/ 1/4" DRILLED DRAIN HOLE
5. 2" SCHEDULE 40 GALVANIZED MALE ADAPTER (THREADED)
6. 2" THREADED FIP x ALUMINUM KAM-LOC QUICK COUPLING MALE ADAPTER WITH CAP
7. PVC PIPE – 6" DIAMETER
8. 2" SCHEDULE 40 GALVANIZED PIPE
9. 30" DIAMETER CMP

NOTE:
WHEN CONSTRUCTING THIS BLOWOFF FOR A TEMPORARY USE, INSTALL A 3 FOOT LENGTH OF WATER PIPE INTO THE BELL END OF THE LAST LENGTH OF MAIN.

2" BLOW-OFF ASSEMBLY

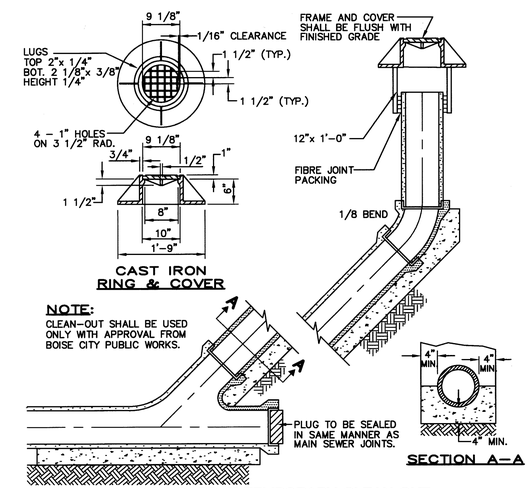

CAST IRON RING & COVER

NOTE:
CLEAN-OUT SHALL BE USED ONLY WITH APPROVAL FROM BOISE CITY PUBLIC WORKS.

SECTION A–A

STANDARD 8" TEMPORARY CLEAN-OUT

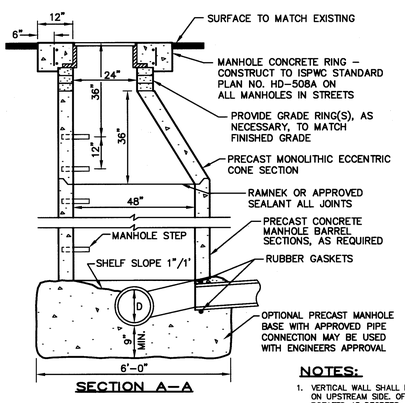

SECTION A–A

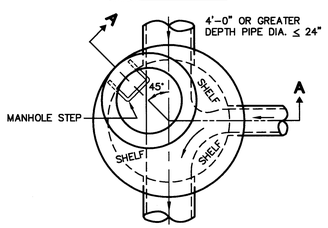

PLAN

STANDARD MANHOLE - TYPE A

NOTES:

1. VERTICAL WALL SHALL BE PLACED ON UPSTREAM SIDE. OF MANHOLE, ROTATED 45 DEGREES.
2. FOR PIPE DIAMETER, D, GREATER THAN 24", SEE "STANDARD MAN-HOLE TYPE B OPTIONAL.
3. MANHOLE FRAME AND COVER:
   A. SEE DRAWING NO. SD 507
   B. FRAME AND COVER SHALL BE FLUSH WITH PAVEMENT.
4. GRADE RINGS SHALL NOT EXCEED 1'-FT. IN HEIGHT.
5. WHERE PVC IS UTILIZED, A RUBBER RING OR GASKETED COLLAR IS TO BE INSTALLED WHERE THE PIPE IS IN CONTACT WITH MANHOLE BASE AND/OR MANHOLE CHANNEL, IN ORDER TO INSURE A WATERTIGHT SEAL.
6. EITHER BASE ON STADARD MANHOLE TYPE B AND TYPE B OPTIONAL MAY BE USED WITH EITHER MANHOLE DESIGN.
7. TYPE B MANHOLE PER I.S.P.W.C. STD. DWG. SD-502 MAY BE USED IN PLACE OF TYPE B OPTIONAL IF REQUIRED.

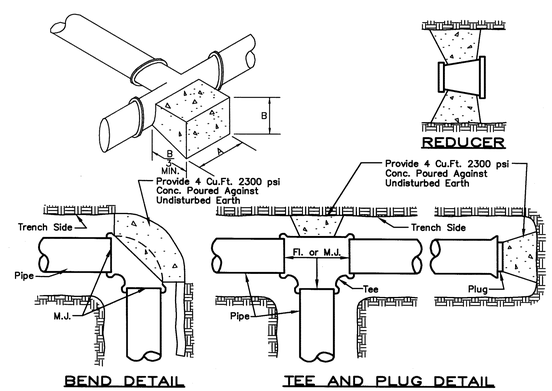

BEND DETAIL

TEE AND PLUG DETAIL

DIMENSION FOR THRUST BLOCKING								
FITTING SIZES	TEES & PLUGS		90° BEND		45° BEND & WYES		REDUCERS & 22 1/2° BEND	
	A	B	A	B	A	B	A	B
4"	1'-7"	1'-2"	1'-9"	1'-6"	1'-8"	0'-10"	1'-7"	0'-6"
6"	2'-0"	1'-11"	2'-5"	2'-2"	1'-10"	1'-7"	1'-9"	0'-10"
8"	2'-8"	2'-6"	3'-2"	3'-0"	2'-5"	2'-1"	1'-9"	1'-6"
10"	3'-4"	3'-3"	4'-0"	3'-10"	3'-0"	2'-9"	2'-2"	1'-11"
12"	4'-0"	3'-10"	4'-8"	4'-8"	3'-8"	3'-3"	2'-7"	2'-3"
14"	5'-5"	3'-10"	6'-6"	4'-11"	4'-9"	3'-5"	3'-5"	2'-5"

NOTE:
THIS TABLE IS BASED ON 150 PSI MAIN PRESSURE
2000 PSF SOIL BEARING PRESSURE.
WRAP ALL FITTINGS WITH POLYETHYLENE.

THRUST BLOCK DETAIL

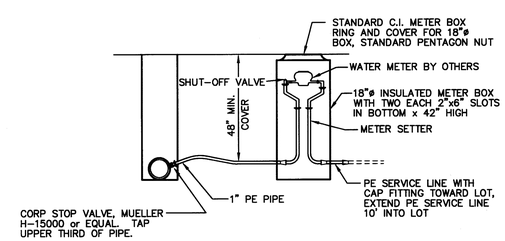

STANDARD WATER SERVICE INSTALLATION

APPROVED FOR CONSTRUCTION
DATE: APRIL 11, 2003

RECORD DOCUMENTS

These Record Documents are based upon the marked-up record drawings, addenda, change orders, and other data furnished by the Contractor and/or public agencies. These Record Documents show significant changes made during construction. Because these Record Documents are based on unverified information provided by other parties, which the Consultant will assume to be reliable, the Consultant cannot and does not warrant their accuracy, except for that information verified by the Engineer.

Signature: Benjamin P. Thomas Date: 6/10/03

REVISION : 03/20/03 BY: SFT
04/11/03 BPT

PROFESSIONAL ENGINEER REGISTERED 10062 STATE OF IDAHO BENJAMIN P. THOMAS

BRIGGS ENGINEERING, INC.
BRIGGS
ENGINEERS PLANNERS SURVEYORS
1800 W. OVERLAND ROAD * BOISE, IDAHO 83705 * (208)344-9700

These drawings, or any portion thereof, shall not be used on other projects without the written agreement from Briggs Engineering, Inc.

SUTTER'S MILL SUBDIVISION NO. 3

SANITARY SEWER AND WATER DETAILS

SCALE: N.T.S.
DWG NO. 20504-DTL
DWG DATE: 12/27/02 SFT

SHEET : 8 OF 8

DT-2

\20504-DTL. sft

RECORD DRAWINGS