- SITE IMPROVEMENT PLANS FOR -

QUICKSILVER SUBDIVISION

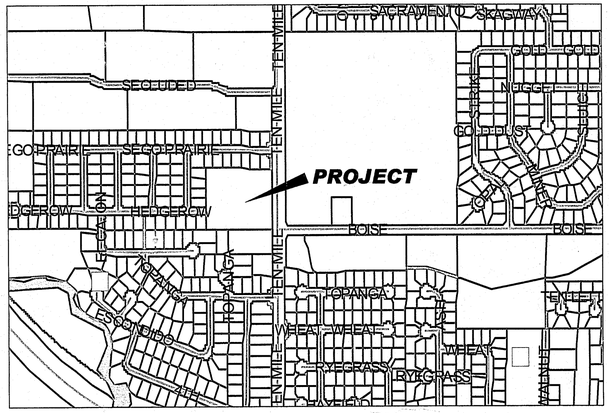

GENERAL

1. ALL WORK SHALL BE DONE IN ACCORDANCE WITH THE SPECIFICATIONS AND/OR REQUIREMENTS OF KUNA CITY PUBLIC WORKS DEPARTMENT, THE ADA COUNTY HIGHWAY DISTRICT, AND/OR THE ISPWC (2000 EDITION)
2. A PRE CONSTRUCTION CONFERENCE WILL BE HELD A MINIMUM OF 48 HOURS PRIOR TO START OF WORK. ALL CONTRACTORS, SUBCONTRACTORS AND/OR UTILITY CONTRACTORS SHOULD BE PRESENT.
3. ALL LOT, BLOCK, STREET RIGHT-OF-WAY, AND EASEMENT DIMENSIONS SHALL BE TAKEN FROM THE FINAL PLAT OF QUICKSILVER SUBDIVISION.
4. THE CONTRACTOR(S) SHALL REMOVE ALL OBSTRUCTIONS, BOTH ABOVE AND BELOW GROUND, AS REQUIRED FOR THE CONSTRUCTION OF THE PROPOSED IMPROVEMENTS. THIS SHALL INCLUDE CLEARING AND GRUBBING WHICH CONSISTS OF CLEARING THE GROUND SURFACE OF ALL TREES, STUMPS, BRUSH, UNDERGROWTH, HEDGES, HEAVY GROWTH OF GRASS OR WEEDS, FENCES, STRUCTURES, DEBRIS, RUBBISH, AND SUCH MATERIAL WHICH, IN THE OPINION OF THE ENGINEER, IS UNSUITABLE FOR THE FOUNDATION OF PAVEMENTS. ALL MATERIAL NOT SUITABLE FOR FUTURE USE ON SITE SHALL BE DISPOSED OF OFF SITE.
5. SURVEY CONTROL POINTS WHICH ARE CRITICAL TO THE CONSTRUCTION OF THE PROJECT ARE LOCATED WITHIN THE LIMITS OF WORK. THE CONTRACTOR SHALL TAKE PRECAUTION TO PROTECT THE POINTS IN PLACE.
6. THE CONTRACTOR SHALL MAINTAIN ALL EXISTING DRAINAGE FACILITIES WITHIN THE CONSTRUCTION AREA UNTIL THE DRAINAGE IMPROVEMENTS ARE IN PLACE AND FUNCTIONING.
7. ALL CONTRACTORS WORKING WITHIN THE PROJECT BOUNDARIES ARE RESPONSIBLE FOR COMPLIANCE WITH ALL APPLICABLE SAFETY LAWS OF ANY JURISDICTIONAL BODY. THE CONTRACTOR SHALL BE RESPONSIBLE FOR ALL BARRICADES, SAFETY DEVICES AND CONTROL OF TRAFFIC WITHIN AND AROUND THE CONSTRUCTION AREA.
8. EXISTING A.C. PAVEMENT SHALL BE CUT TO A NEAT STRAIGHT LINE PARALLEL OR PERPENDICULAR TO THE STREET CENTERLINE AND THE EXPOSED EDGE SHALL BE TACKED WITH EMULSION PRIOR TO PAVING.
9. ALL MATERIALS FURNISHED ON OR FOR THE PROJECT MUST MEET THE MINIMUM REQUIREMENTS OF THE APPROVING AGENCIES OR AS SET FORTH HEREIN, WHICHEVER IS MORE RESTRICTIVE.
10. CONTRACTORS MUST FURNISH PROOF THAT ALL MATERIALS INSTALLED ON THIS PROJECT MEET THE REQUIREMENTS OF ITEM #9 AT THE REQUEST OF THE AGENCY AND/OR THE ENGINEER.
11. ALL CONTRACTORS WORKING WITHIN THE PUBLIC ROAD RIGHT-OF-WAY ARE REQUIRED TO SECURE A RIGHT-OF-WAY PERMIT FROM ACHD AT LEAST 24 HOURS PRIOR TO ANY CONSTRUCTION.
12. ALL COSTS OF RETESTING FOR PREVIOUSLY FAILED TESTS SHALL BE BACKCHARGED TO THE CONTRACTOR BY THE OWNER.
13. ALL COSTS TO THE CONTRACTOR INCURRED IN CORRECTING DEFICIENT WORK SHALL BE TO THE CONTRACTORS ACCOUNT. FAILURE TO CORRECT SUCH WORK WILL BE CAUSE FOR A STOP WORK ORDER AND POSSIBLE TERMINATION.
14. THE CONTRACTOR IS TO FIELD VERIFY ALL EXISTING CURB & GUTTER, STORM DRAIN, CHANNEL CROSSINGS AND SEWER ELEVATIONS OR INVERTS PRIOR TO CONSTRUCTION AND NOTIFY THE ENGINEER WHEN ELEVATIONS OR INVERTS DO NOT MATCH PLANS.
15. THE LOCATIONS OF EXISTING UNDERGROUND UTILITIES ARE SHOWN IN APPROXIMATE LOCATIONS. THE CONTRACTOR SHALL DETERMINE THE EXACT LOCATION OF ALL EXISTING UTILITIES BEFORE COMMENCING WORK. THE CONTRACTOR AGREES TO BE FULLY RESPONSIBLE FOR ANY AND ALL DAMAGES WHICH MIGHT BE OCCASIONED BY FAILURE TO EXACTLY LOCATE AND PRESERVE ANY AND ALL UNDERGROUND UTILITIES.
16. EACH CONTRACTOR SHALL BE RESPONSIBLE FOR ACQUIRING ANY NECESSARY NPDES PERMITS, FILING ANY NOI's, AND PREPARING A POLLUTION PREVENTION PLAN (PPP) IN ACCORDANCE WITH THE ENVIRONMENTAL PROTECTION AGENCY. CONTACT THE EPA AT (208) 378-5746 FOR THE REQUIRED INFORMATION. SAID PERMIT SHALL BE PRESENTED TO THE ENGINEER AT LEAST 48 HOURS PRIOR TO THE BEGINNING OF CONSTRUCTION.
17. ALL UTILITIES INCLUDING SERVICE LINES WITHIN THE STREET TRAVEL WAYS SHALL BE IN PLACE PRIOR TO CURB, GUTTER, SIDEWALKS, AND STREET CONSTRUCTION.
18. THE PIPE CONTRACTOR SHALL REPLACE ALL PAVEMENT AND CONCRETE REMOVED FOR THE INSTALLATION OF WATER, SEWER, OR IRRIGATION PIPE. ALL PAVEMENT SHALL BE REPLACED WITHIN SEVEN CALENDAR DAYS FROM THE TIME THE PAVEMENT AND/OR CONCRETE IS REMOVED. CONCRETE AND PAVEMENT SHALL BE REPLACED PER ISPWC STANDARDS.
19. NO PAVING SHALL OCCUR UNTIL THE CONTRACTOR OBTAINS WRITTEN APPROVAL OF ALL INSTALLED WATER, SEWER, AND PRESSURE IRRIGATION FACILITIES FROM THE CITY OF KUNA.

ROADWAY

1. ALL CONSTRUCTION IN THE PUBLIC RIGHT-OF-WAY SHALL CONFORM TO THE 2000 EDITION OF THE ISPWC AND THE ACHD SUPPLEMENTAL SPECIFICATIONS. NO EXCEPTIONS TO DISTRICT POLICY, STANDARDS, AND THE ISPWC WILL BE ALLOWED UNLESS SPECIFICALLY AND PREVIOUSLY APPROVED IN WRITING BY THE DISTRICT.
2. WHEN DISCREPANCIES OCCUR BETWEEN PLANS AND SPECIFICATIONS, THE CONTRACTOR SHALL IMMEDIATELY NOTIFY THE ENGINEER. UNTIMELY NOTIFICATION SHALL NEGATE ANY CONTRACTORS CLAIM FOR ADDITIONAL COMPENSATION.
3. INSPECTION OF WORK WITHIN THE RIGHT-OF-WAYS SHALL BE BY THE ADA COUNTY HIGHWAY DISTRICT AND THE OWNER'S ENGINEER.
4. ALL TOPS OF VALVE BOXES AND SEWER MANHOLES SHALL BE SET FLUSH WITH THE SLOPE OF THE FINISHED STREET GRADES. THE ROADWAY CONTRACTOR SHALL INSTALL AND ADJUST ALL SPACERS, GRADE RINGS, MANHOLE RINGS AND LIDS.
5. EXISTING A.C. PAVEMENT SHALL BE CUT TO A NEAT STRAIGHT LINE PARALLEL OR PERPENDICULAR TO THE STREET CENTERLINE AND THE EXPOSED EDGE SHALL BE TACKED WITH EMULSION PRIOR TO PAVING.
6. ALL COSTS OF RETESTING FOR PREVIOUSLY FAILED TESTS SHALL BE BACKCHARGED TO THE CONTRACTOR BY THE OWNER.
7. ALL COSTS TO THE CONTRACTOR INCURRED IN CORRECTING DEFICIENT WORK SHALL BE TO THE CONTRACTORS ACCOUNT. FAILURE TO CORRECT SUCH WORK WILL BE CAUSE FOR A STOP WORK ORDER AND POSSIBLE TERMINATION.
8. ALL STORM DRAINAGE APPURTENANCES SHALL BE INSPECTED AND CERTIFIED BY ADA COUNTY HIGHWAY DISTRICT.
9. ALL WATER VALVES WILL BE PLACED SO AS NOT TO CONFLICT WITH ANY CONCRETE CURB, GUTTER, VALLEY GUTTER, AND SIDEWALK IMPROVEMENTS.
10. ALL WATER METERS AND FIRE HYDRANTS ARE TO BE LOCATED OUT OF THE ROAD RIGHT-OF-WAY. THERE MUST BE AT LEAST A ONE (1) FOOT SEPARATION BETWEEN BACK OF SIDEWALK (OR CURB IF NO SIDEWALK) AND THE LEADING EDGE OF ANY FIRE HYDRANT.
11. OVER EXCAVATION AND ADDITIONAL GRANULAR BACKFILL MAY BE REQUIRED IN HIGH GROUNDWATER AREAS WHICH ARE TO BE DETERMINED BY THE FIELD INSPECTOR.
12. ALL WORK SHALL BE INSPECTED BY THE ADA COUNTY HIGHWAY DISTRICT OR BY THE OWNERS ENGINEERS IN ACCORDANCE WITH THE LATEST EDITION OF THE "CONSTRUCTION QUALITY ASSURANCE MANUAL"
13. ALL MATERIAL PLACED AS FILL OR BACKFILL SHALL BE PLACED AND COMPACTED IN ACCORDANCE WITH SECTION 306 OF THE 2000 I.S.P.W.C. AND THE LATEST EDITION OF THE ADA COUNTY HIGHWAY DISTRICT STANDARD SPECIFICATIONS.
14. ROADWAY CONSTRUCTION WILL MEET SPECIFIC DETAILS AND REQUIREMENTS OF THE FOLLOWING IDAHO STANDARDS FOR PUBLIC WORKS CONSTRUCTION STANDARD DRAWINGS: (2000 EDITION)
    1. RESIDENTIAL STREET SECTION, DRAWING NO. SD-801, AND SECTIONS AS SHOWN ON ROADWAY DETAIL SHEET.
    2. STANDARD 6" VERTICAL CURB & GUTTER, DRAWING NO. SD-701.
    3. ROLLED CURB AND GUTTER, DRAWING NO. SD-702.
    4. PEDESTRIAN RAMP FOR HANDICAPPED, DRAWING NO. SD-712.
    5. SIDEWALKS, DRAWING NO. SD-709.
    6. STANDARD DROP INLET TYPE , DRAWING NO. SD-801.
    7. 4.0' CONCRETE VALLEY GUTTER, DRAWING NO. SD-708.
15. STORM DRAIN MONUMENTS TO BE INSTALLED.

WATER

1. THE WATER SYSTEM SHALL BE CONSTRUCTED TO CONFORM WITH THE STANDARDS SET FORTH IN THE "IDAHO REGULATIONS FOR PUBLIC DRINKING WATER SYSTEMS", AND THE IDAHO STANDARDS FOR PUBLIC WORKS CONSTRUCTION (ISPWC 2000 EDITION).
2. ALL WATER MAINS SHALL BE POLY-VINYL-CHLORIDE (PVC) CONFORMING TO THE PROVISIONS OF AWWA C-900, CLASS 150, SDR 18, OR CLASS 150 CEMENT MORTAR LINED DUCTILE IRON CONFORMING TO AWWA C-104 AND AWWA C-151. ALL FITTINGS SHALL BE MECHANICAL JOINT DUCTILE IRON CONFORMING TO AWWA C-110. ALL PLASTIC PIPE SHALL BE INSTALLED WITH A #12 DIRECT BURIAL TRACER WIRE PLACED ALONG THE NORTH AND EAST SIDE OF THE MAIN. THE TRACER WIRE SHALL BE ACCESSIBLE AT ALL VALVE BOXES AND SHALL BE EXTENDED ALONG THE OUTSIDE OF THE LOWER PORTION OF THE VALVE BOX AND ALONG THE INSIDE OF THE UPPER PORTION. MINIMUM DEPTH FOR ALL WATER MAINS SHALL BE FOUR (4) FEET FROM FINISHED GRADE TO THE TOP OF THE PIPE.
3. ALL WATER MAINS SHALL HAVE A MINIMUM COVER OF FOUR (4) FEET. AFTER INSTALLATION OF THE WATER MAINS, THE TRENCHES SHALL BE COMPACTED TO 95% OF MAXIMUM DENSITY TO PREVENT FURTHER SETTLEMENT. ALL MAINS SHALL BE LEAK-TESTED, FLUSHED AND SANITIZED BEFORE CONNECTING TO THE SYSTEM.
4. WHERE IT IS NECESSARY FOR THE SEWER OR NON POTABLE WATER LINE AND WATER LINE TO CROSS EACH OTHER AND THE SEWER OR NON POTABLE LINE IS LESS THAN 18" BELOW OR ABOVE THE WATER MAIN, THE SEWER OR NON POTABLE WATER LINE CROSSING SHALL BE PVC PRESSURE PIPE CONFORMING TO AWWA C-900 (CLASS 150) OR ASTM D2241 (CLASS 160) STANDARDS WITH WATERTIGHT JOINTS, OR EQUAL CONSTRUCTION, FOR A DISTANCE OF 10' ON BOTH SIDES OF THE WATER LINE IN ACCORDANCE WITH SECTION IDAPA 58.01.08 OF THE IDAHO RULES FOR PUBLIC WATER DRINKING SYSTEMS. ONE FULL LENGTH OF BOTH WATER MAIN AND SEWER OR NON POTABLE WATER LINE SHALL BE CENTERED OVER THE CROSSING POINT SO THAT ALL JOINTS WILL BE AS FAR FROM THE CROSSING AS POSSIBLE.
5. ALL MAIN LINE WATER VALVES SHALL BE RESILIENT-SEATED GATE VALVES CONFORMING TO AWWA C-509. ALL WATER VALVES SHALL BE FURNISHED WITH A STANDARD CAST IRON 5-1/4 INCH DIAMETER ADJUSTABLE VALVE BOX. THE CAST IRON COVER SHALL BE MARKED WITH THE WORD "WATER" AS AN INTEGRAL PART OF THE COVER.
6. ALL TEES, PLUGS, BENDS, AND OTHER LOCATIONS WHERE UNBALANCED FORCES EXIST. SHALL BE SECURED AND ANCHORED BY SUITABLE THRUST BLOCKING AS SHOWN ON SD-403 (ISPWC).
7. NO. 12 DIRECT BURIAL WIRE SHALL BE PLACED ALONG THE NORTH AND EAST SIDE OF WATER MAINS AND SERVICE LINES. WIRE SHALL BE TAPED TO GATE VALVES SO IT IS ACCESSIBLE FROM ABOVE BUT DOES NOT INTERFERE WITH VALVE OPERATION.
8. (A) THE DISTRIBUTION SYSTEM SHALL BE PRESSURE TESTED TO 150 PSI OR 50 PSI ABOVE MAXIMUM WORKING PRESSURE IN THE AREA, WHICHEVER IS GREATER, OR SECTION 401 OF THE ISPWC TO THE SATISFACTION OF KUNA CITY.

   (B) PRIOR TO USE OF THE PIPE LINE, IT SHALL BE DISINFECTED ACCORDING TO SECTION 401 (ISPWC) AND THEN FLUSHED. THE DISINFECTION AND FINAL FLUSHING PROCEDURE SHALL BE TESTED TO DETERMINE IF THE APPROPRIATE MINIMUM CHLORINE (CL) RESIDUALS HAVE BEEN EXCEEDED.

   (C) EACH METER SETTER SHALL BE OPENED TO VERIFY THAT THE CORPORATION STOP IS OPEN AND THE SERVICE IS FUNCTIONAL PRIOR TO PAVING.
9. CONTRACTOR SHALL NOTIFY OWNER'S ENGINEER AND KUNA CITY THREE (3) WORKING DAYS BEFORE INITIAL CONSTRUCTION BEGINS AND SHALL ALSO REQUEST KUNA CITY INSPECTION OF WATER LINES AND APPURTENANCES TWENTY-FOUR (24) HOURS IN ADVANCE OF BACKFILLING.
10. CONTRACTOR TO FIELD VERIFY ALL VALVE BOX LID ELEVATIONS TO ASSURE THAT SAID LID ELEVATIONS MATCH FINAL STREET GRADE, AND ALL METER LID ELEVATIONS TO MATCH AN EXTENSION OF THE SIDEWALK GRADE.
11. VALVES FLANGED OR M.J. SHALL BE LOCATED IN THE STREET, ALL GATE VALVES SHALL BE SET AS CLOSE (FLANGE CONNECTED) AS POSSIBLE TO MAIN LINE FITTINGS. ALL WATER METERS AND FIRE HYDRANTS ARE TO BE LOCATED OUT OF THE ROAD RIGHT-OF-WAY. THERE MUST BE AT LEAST A ONE (1) FOOT SEPARATION BETWEEN ANY BACK OF SIDEWALK (OR CURB IF NOSIDEWALK) AND THE LEADING EDGE OF ANY FIRE HYDRANT.
12. UPON THE COMPLETION OF WORK, THE CONTRACTOR SHALL SUBMIT A SET OF AS-BUILT PLANS TO KUNA CITY & OWNER'S ENGINEER.
13. WATER SERVICE LINES SHALL BE PLACED IN A 2 INCH DIAMETER SCHEDULE 80 WATER CLASS PIPE WHEREVER THE SERVICE LINE CROSSES A STREET DRAINAGE SEEPAGE BED.
14. THE CONTRACTOR MAY PRESSURE TEST ALL WATER LINES AFTER DISINFECTION AND FLUSHING BUT PRIOR TO INSTALLATION OF OTHER UTILITIES. AFTER ALL UTILITIES ARE INSTALLED AND PRIOR TO PAVING THE CONTRACTOR SHALL PERFORM A FINAL PRESSURE TEST WITH KUNA CITY PERSONNEL IN ATTENDANCE THE CONTRACTOR SHALL FURNISH ALL PERSONNEL AND EQUIPMENT NECESSARY TO CONDUCT THE TEST.
15. THE CONTRACTOR SHALL BE RESPONSIBLE FOR PROVIDING CONTINUOUS WATER SERVICE TO ALL EXISTING WATER USERS AFFECTED BY CONSTRUCTION.
16. THE CONTRACTOR SHALL BE RESPONSIBLE FOR LOCATING & MARKING ALL EXISTING SERVICE CONNECTIONS WITH AN 8-FOOT, 2"x4" BOARD, PAINTED BLUE.
17. THE CONTRACTOR SHALL FURNISH KUNA CITY WITH REPORTS FROM A CERTIFIED LABORATORY OF THE BACTERIA SAMPLES SHOWING THAT THE WATER LINES HAVE PASSED BACTERIA SAFETY REQUIREMENTS.
18. THE CONTRACTOR SHALL NOTIFY KUNA CITY WHEN LEAVING THE JOB FOR ANY REASON AND BEFORE STARTING TO WORK AGAIN. CONTRACTOR SHALL ALSO DO A FINAL WALK OVER AND INSPECTION OF JOB WITH KUNA CITY WHEN FINISHED WITH THE JOB.
19. THE PAVING CONTRACTOR SHALL SET WATER VALVE RISERS IN CONCRETE COLLARS SIMILAR TO ISPWC STANDARD DRAWING. SD-508.
20. ALL FIRE HYDRANTS SHALL BE DRY BARREL FIRE HYDRANTS CONFORMING TO AWWA C-502. HYDRANTS SHALL HAVE A FIVE (5) FOOT SETTING; MINIMUM 5-1/4 INCH VALVE OPENING; 150 PSI WORKING PRESSURE; ONE 4-1/2 INCH DIAMETER NATIONAL STANDARD PUMPER NOZZLE; AND TWO 2-1/2 INCH DIAMETER NATIONAL STANDARD THREAD FIRE HOSE NOZZLES. THE VALVE OPERATOR SHALL OPEN LEFT (COUNTER CLOCKWISE). THE HYDRANT SHALL BE EQUIPPED WITH A BREAKABLE TRAFFIC FLANGE; A DRAIN THAT AUTOMATICALLY OPENS WHEN THE HYDRANT IS CLOSED; AND A SIX (6) INCH MECHANICAL JOINT CONNECTION. THE HYDRANT SHALL BE EQUIPPED WITH A SIX (6) INCH FLANGED BY MECHANICAL JOINT RESILIENT-SEAT GATE VALVE WITH CAST IRON VALVE BOX ATTACHED DIRECTLY TO THE MAIN LINE TEE. HYDRANTS SHALL BE INSTALLED SUCH THAT THE BREAKABLE TRAFFIC FLANGE IS SET TWO (2) INCHES MINIMUM, 6-INCHES MAXIMUM ABOVE THE BACK OF THE SIDEWALK OR FINISH GRADE AS APPLICABLE. FIRE HYDRANTS SHALL BE A CLOW MEDALLION HYDRANT, WATEROUS PACER 100 HYDRANT, OR MUELLER A423. NO OTHERS WILL BE ACCEPTED. HYDRANT SPACING SHALL BE 450 FEET. HYDRANT LOCATIONS SHALL BE APPROVED IN WRITING BY THE KUNA RURAL FIRE DEPARTMENT. A COPY OF THE PRELIMINARY PLAT SHOWING THE FIRE HYDRANT LOCATIONS WITH THE FIRE DEPARTMENTS APPROVAL SHALL BE SUBMITTED WITH THE CONSTRUCTION PLANS FOR FINAL REVIEW AND APPROVAL BY THE CITY ENGINEER.
21. INDIVIDUAL WATER SERVICES SHALL BE INSTALLED FOR EACH CONNECTION. THE WATER SERVICE SHALL CONSIST OF A PIPE SADDLE WITH ONE (1) INCH CORPORATION STOP; ONE (1) CHECK VALVE INSTALLED ON THE OUTLET SIDE OF THE SETTER; ONE (1) INCH CLASS 200, SDR 7.3 POLYETHYLENE PIPE CONFORMING TO AWWA C-901; 18 INCH TALL 5/8"x3/4" COPPER METER SETTER WITH LOCKABLE SHUTOFF VALVE; AND 18 INCH DIAMETER BY 30 INCH TALL INSULATED METER BOX AS MANUFACTURED BY "MID-STATES PLASTIC, INC.", OR APPROVED EQUAL; AND A CAST IRON FRAME AND COVER TAPPED WITH A 1 INCH DIAMETER HOLE FOR THE CITY AUTO READ METER SENSOR; APPROVED BY THE CITY. THE 1 INCH WATER SERVICE SHALL BE EXTENDED A MINIMUM OF TEN FEET ON THE HOUSE SIDE OF THE METER, OR AS REQUIRED TO EXTEND PAST TO OTHER UTILITIES LOCATED IN THE TEN FOOT EASEMENT. WATER METERS SHALL BE FURNISHED AND INSTALLED BY THE CITY.
22. ALL PIPE, MAINS, AND SERVICES SHALL BE BEDDED WITH TYPE 1 BEDDING. IN AREAS OF ROCK EXCAVATION BEDDING SHALL BE SIX (6) INCHES BELOW THE PIPE.
23. ALL NEW WATER SYSTEM COMPONENTS MUST BE PRESSURE TESTED, DISINFECTED, FLUSHED AND PASS A BACTERIOLOGICAL TEST PRIOR TO FINAL CONNECTION TO THE EXISTING SYSTEM AT ALL LOCATIONS WHERE THE EXISTING BLOW-OFFS AND ISOLATION VALVES ARE TO BE REMOVED AND RELOCATED, AND ANY OTHER LOCATION WHERE THE EXISTING SYSTEM IS NOT COMPLETELY ISOLATED BY A GATE VALVE.

RECORD DRAWING
08-24-04

SEWER

1. ALL WORK SHALL BE DONE IN ACCORDANCE WITH THE (2000) SEWER SPECIFICATIONS AND STANDARD DRAWINGS OF THE IDAHO STANDARDS FOR PUBLIC WORKS CONSTRUCTION (ISPWC) KUNA CITY PUBLIC WORKS DEPARTMENT AND/OR THE ADA COUNTY HIGHWAY DISTRICT MODIFICATIONS TO THE ISPWC.
2. FINAL APPROVAL AND ACCEPTANCE OF ALL SEWER CONSTRUCTION WILL BE BY THE CITY OF KUNA.
3. MANHOLES 4 FEET OR GREATER IN DEPTH, SHALL BE TYPE "A" IN ACCORDANCE WITH ISPWC STANDARD DRAWING SD 501. MANHOLES LESS THAN 4 FEET IN DEPTH SHALL BE CONSTRUCTED IN ACCORDANCE WITH ISPWC STANDARD DRAWING SD 505.
4. SEWER PIPE 4" TO 15" WITH COVER OF GREATER THAN 3 FEET, SHALL BE BELL AND SPIGOT, POLYVINYL CHLORIDE (PVC), SDR 35, ASTM D-3034 AS SET FORTH BY THE KUNA CITY PUBLIC WORKS DEPARTMENT. SEWER PIPE WITH LESS THAN 3 FEET OF COVER SHALL BE DUCTILE IRON CONFORMING TO ANSI A-21.51 OR AWWA C-151. A RUBBER BOOT IS TO BE INSTALLED WHERE THE PIPE IS IN CONTACT WITH THE MANHOLE BASE AND/OR ITS CHANNEL, IN ORDER TO ENSURE A WATERTIGHT SEAL. 18" TO 27" PVC PIPE AND LARGER SHALL BE BELL AND SPIGOT, ASTM F679, T-1 WALL THICKNESS.
5. SEWER INSPECTIONS WILL BE BY THE OWNER'S ENGINEER/CITY OF KUNA PUBLIC WORKS AND THEIR DECISIONS SHOULD BE CONSIDERED AS FINAL. SUCH APPROVAL SHALL NOT RELIEVE THE CONTRACTOR FROM THE RESPONSIBILITY OF PERFORMING THE WORK IN AN ACCEPTABLE MANNER.
6. STUB OUTS FOR SERVICE LINES SHALL BE MARKED IN ACCORDANCE WITH THE SPECIFICATIONS. THE CONTRACTOR IS TO NOTIFY THE OWNER OR CITY ENGINEER WHEN THIS IS ACCOMPLISHED SO THAT ANY DESTRUCTION OF SAME IS NOT BACKCHARGED TO THE SEWER CONTRACTOR.
7. PRIOR TO FINAL ACCEPTANCE, AFTER ALL UTILITIES ARE IN AND PRIOR TO PAVING, AN AIR TEST SHALL BE CONDUCTED. THE CONTRACTOR SHALL CONTACT OWNER'S ENGINEER AND THE CITY OF KUNA A MINIMUM OF 24 HOURS PRIOR TO TESTING.
8. ALL MANHOLES SHALL BE CONSTRUCTED SO AS TO BE WATER TIGHT AND WITH THE TOP OF CONE LOCATED WITHIN ONE (1) FOOT OF THE FINISHED GRADE. THE SEWER CONTRACTOR SHALL SUPPLY ALL LID ASSEMBLIES AND THE REQUIRED NUMBER OF RISER AND GRADE RINGS. THE SEWER CONTRACTOR SHALL FIELD VERIFY THE ELEVATION OF THE TOP OF THE EXISTING AND CONSTRUCTED MANHOLE CONES TO ASSURE THAT ALL RING ELEVATIONS MATCH FINAL STREET GRADES. MANHOLES SHALL HAVE 18 INCH MAXIMUM CLEARANCE BETWEEN THE RIM AND TOP OF CONE. EACH OF THE GRADE RINGS SHALL BE SET IN A BED OF NON-SHRINK GROUT OR MORTAR AND TROWELLED SMOOTH WITH THE INSIDE OF THE MANHOLE. THE NON-SHRINK GROUT SHALL ALSO BE APPLIED BETWEEN METAL FRAME AND GRADE RINGS. STACKING OF THE GRADE RINGS AND FRAME WITHOUT NON-SHRINK GROUT OR MORTAR WILL NOT BE ALLOWED.
9. THE PAVING CONTRACTOR SHALL SET THE GRADE RINGS AND POUR THE CONCRETE COLLARS PER STANDARD DRAWING NO. SD 508. THE PAVING CONTRACTOR SHALL CONTACT ADA COUNTY HIGHWAY DISTRICT 24 HOURS PRIOR TO POURING CONCRETE COLLARS.
10. THE CONTRACTOR SHALL NOTIFY THE CITY PUBLIC WORKS DEPARTMENT 48 HOURS PRIOR TO CONSTRUCTION AT 922-3397.
11. SERVICE STUB OUTS WILL BE TO THE POINTS SHOWN IN THE DRAWINGS OR AS MARKED BY THE ENGINEER IN THE FIELD. SEPWCE LINES SHALL BE CONSTRUCTED IN ACCORDANCE WITH STD. DWG. NO. SD-511A. THOSE SEWER SERVICE STUB OUTS BEGINNING AT A MANHOLE WILL HAVE THE TOP OF THE FOUR INCH SERVICE LINE PIPE MATCH THE TOP OF THE MAINLINE PIPE. THE SEWER SERVICE MARKER SHALL BE IN PLACE FOR THE FINAL INSPECTION.
12. THE PARALLEL HORIZONTAL SEPARATION OF THE WATER AND SEWER MAINS SHALL BE A MINIMUM OF TEN (10) FEET.
13. GROUNDWATER LEVELS SHALL BE MAINTAINED BELOW THE BOTTOM OF THE TRENCH DURING THE PIPE LAYING AND PIPE JOINING OPERATIONS.
14. THE TRENCH BACKFILL ABOVE THE PIPE ZONE WILL BE INSPECTED BY THE ADA COUNTY HIGHWAY DISTRICT OR BY THE OWNER'S ENGINEER IN ACCORDANCE WITH THE LATEST EDITION OF THE "CONSTRUCTION QUALITY ASSURANCE MANUAL." COMPACTION TESTS ARE REQUIRED IN THE BACKFILL ABOVE THE PIPE ZONE, WITHIN PUBLIC RIGHT-OF-WAY, ACCORDING TO ADA COUNTY HIGHWAY DISTRICT REQUIREMENTS AND THE RESULTS SHALL BE SUBMITTED TO KUNA CITY AND ADA COUNTY HIGHWAY DISTRICT PRIOR TO FINAL ACCEPTANCE.
15. ALL STATIONING RELATES TO THE GRAVITY SEWER CENTERLINE.
16. THE SEWER MAIN SHALL BE TESTED FOR DEFLECTION IN ACCORDANCE WITH THE ISPWC
17. SEWER SERVICE LINES SHALL BE INSTALLED PRIOR TO STREET IMPROVEMENTS.
18. KUNA CITY WILL PROVIDE PERIODIC INSPECTIONS FOR AN EIGHT HOUR DAY, FROM 8:00 A.M. TO 5:00 P.M., FOR A FORTY HOUR WEEK. THE CONTRACTOR SHALL REIMBURSE THE CITY AT RATES ESTABLISHED BY THE CITY FOR INSPECTION IN EXCESS OF THE NORMAL WORK WEEK, INCLUDING LEGAL HOLIDAYS. OVERTIME INSPECTION RATES AND A LIST OF LEGAL HOLIDAYS CAN BE OBTAINED FROM THE KUNA CITY PUBLIC WORKS DEPARTMENT.
19. WHERE IT IS NECESSARY FOR THE SEWER OR NON POTABLE WATER LINE AND WATER LINE TO CROSS EACH OTHER AND THE SEWER OR NON POTABLE LINE IS LESS THAN 18" BELOW OR ABOVE THE WATER MAIN, THE SEWER OR NON POTABLE WATER LINE CROSSING SHALL BE PVC PRESSURE PIPE CONFORMING TO AWWA C-900 (CLASS 150) OR ASTM D2241 (CLASS 160) STANDARDS WITH WATERTIGHT JOINTS, OR EQUAL CONSTRUCTION, FOR A DISTANCE OF 10' ON BOTH SIDES OF THE WATER LINE IN ACCORDANCE WITH IDAPA SECTION 58.01.08 IDAHO RULES FOR PUBLIC WATER DRINKING SYSTEMS. ONE FULL LENGTH OF BOTH WATER MAIN AND SEWER OR NON POTABLE WATER LINE SHALL BE CENTERED OVER THE CROSSING POINT SO THAT ALL JOINTS WILL BE AS FAR FROM THE CROSSING AS POSSIBLE.
20. SEWER CONSTRUCTION WILL MEET SPECIFIC DETAILS AND REQUIREMENTS OF THE FOLLOWING IDAHO STANDARDS FOR PUBLIC WORKS CONSTRUCTION AND THE ADA COUNTY HIGHWAY DISTRICT STANDARD DRAWINGS:
    1. STANDARD MANHOLE - TYPE A, DRAWING NO. SD-501.
    2. STANDARD SHALLOW MANHOLE, DRAWING NO. SD-505.
    3. MANHOLE COLLAR DETAIL, DRAWING NO. SD-508.
    4. MANHOLE COVER & FRAME, DRAWING NO. SD-507.
    5. STANDARD SEWER SERVICE LINE, DRAWING NO. SD-511-A.
    6. SEWER SERVICE MARKER, DRAWING NO. SD-512.
21. THE CONTRACTOR SHALL LEAVE THE EXCAVATION FOR THE UPSTREAM END OF ALL SERVICE LINES OPEN FOR FIELD VERIFICATION OF THE INVERT ELEVATION BY THE CITY'S INSPECTOR. THE CONTRACTOR SHALL NOT BACKFILL THE ENDS OF SERVICE LINES UNTIL THE CONTRACTOR HAS OBTAINED APPROVAL FROM KUNA CITY'S INSPECTOR OR MADE OTHER ARRANGEMENTS FOR THE VERIFICATION OF SERVICE LINE INVERT ELEVATIONS.
22. THE CONTRACTOR SHALL INSTALL A REMOVABLE PLUG DOWNSTREAM OF SSMH A. THE PLUG SHALL REMAIN IN PLACE DURING CONSTRUCTION UNTIL FINAL ACCEPTANCE OF THIS SEWER PROJECT.
23. ALL PIPE, MAINS, AND SERVICES SHALL BE BEDDED WITH TYPE 1 BEDDING. IN AREAS OF ROCK EXCAVATION BEDDING SHALL BE SIX (6) INCHES BELOW THE PIPE.
24. PRIOR TO CONNECTING TO THE EXISTING SEWER SYSTEM WHERE THE CONNECTION IS MADE BETWEEN MANHOLES AND THE EXISTING SERVICES ALL SEWER MAINS AND SERVICES MUST BE AIR TESTED.

- LEGEND -

- FOUND BRASS CAP MONUMENT
- FOUND ALUMINUM CAP MONUMENT
- SET 5/8" IRON PIN WITH CAP
- PROPERTY BOUNDARY LINE
- SECTION LINE
- EASEMENT LINE
- RIGHT-OF-WAY LINE
- CENTERLINE
- LOT LINE
- GM — GAS MARKER
- MAILBOX
- LIGHT POLE
- POWER POLE
- TRAFFIC SIGN
- PJB — POWER JUNCTION BOX
- IRR — IRRIGATION VALVE
- IRRIGATION BOX
- IRRIGATION MANHOLE
- EDGE OF GRAVEL ROAD
- OVERHEAD POWER LINE
- x—x—x—x — FENCE
- NATURAL GAS LINE
- SANITARY SEWER LINE W/ MANHOLE
- PRESSURE SANITARY SEWER LINE W/ MH
- DOMESTIC WATER LINE
- IRRIGATION WATER LINE
- CURB, GUTTER AND SIDEWALK
- 17 — LOT NO.
- NEW WATER BLOW OFF
- DRAINAGE FLOW DIRECTION
- NEW CATCH BASIN
- NEW SAND AND GREASE TRAP
- NEW SEWER MANHOLE
- NEW WATER GATE VALVE
- NEW FIRE HYDRANT

- TABLE OF CONTENTS -

1 COVER SHEET
2 PLAT OF QUICKSILVER SUB
3 STREET PLAN AND PROFILE
4 SEWER & WATER PLAN &PROFILE
5 PRESSURE IRRIGATION PLAN
6 DETAILS

Quicksilver Subdivision

Kuna, Idaho - Ada County

Cover Sheet

REVISIONS

NO.	DESCRIPTION OF CHANGE	BY	DATE
1	REVISE NOTES PER CITY OF KUNA COMMENTS	CSK	7/1/03
2	REVISE NOTES PER DEQ COMMENTS	CSK	8/22/03

INITIAL SUBMITTAL DATE: 6-17-03

CK Engineering, Inc.
3350 Americana Terrace
Suite 140
Boise, ID 83706
345-9030

PROFESSIONAL ENGINEER REGISTERED 8-26-03 9412 CHAD S. KINKEAD

SCALE: NONE

Sheet 1

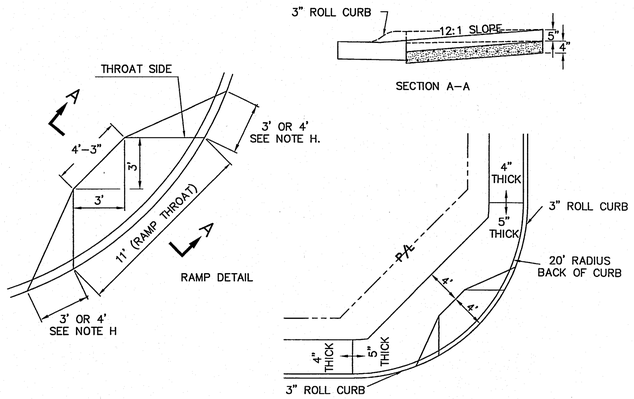

PEDESTRIAN RAMP TYPE "B"

SD-712B
NTS

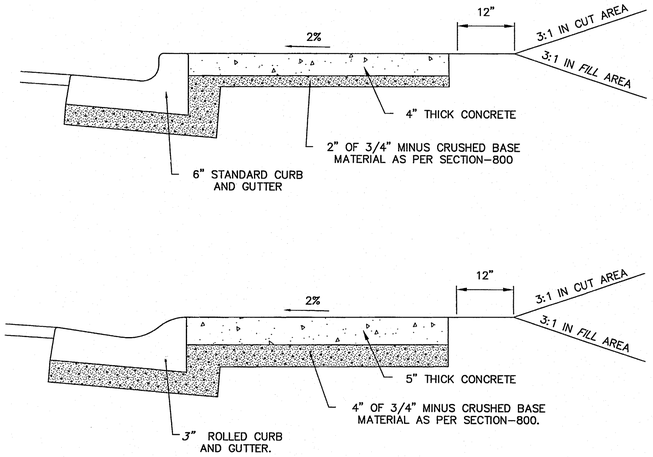

CONCRETE SIDEWALK

SD-709
NTS

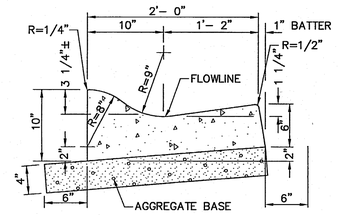

3" ROLLED CURB & GUTTER

SD-702
NTS

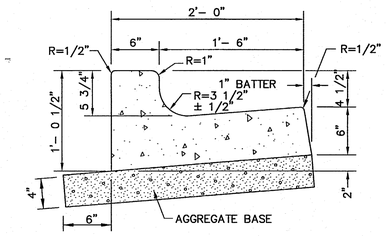

6" VERTICAL CURB & GUTTER

SD-701
NTS

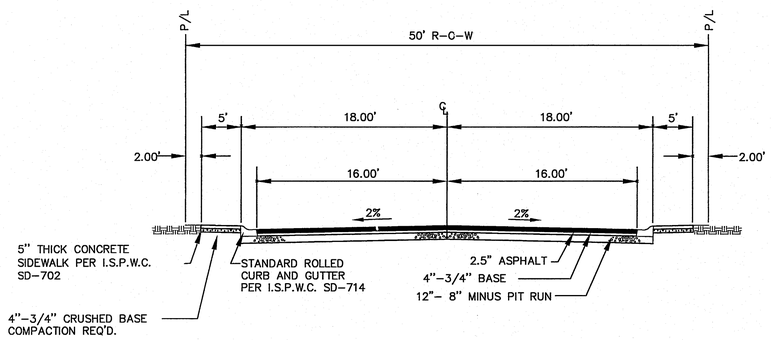

TYPICAL STREET SECTION

NTS

RECORD DRAWING
08-24-04

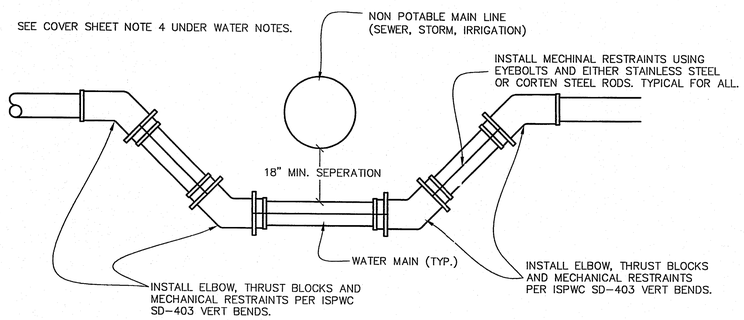

WATER MAIN CONFLICT CROSSING

NTS

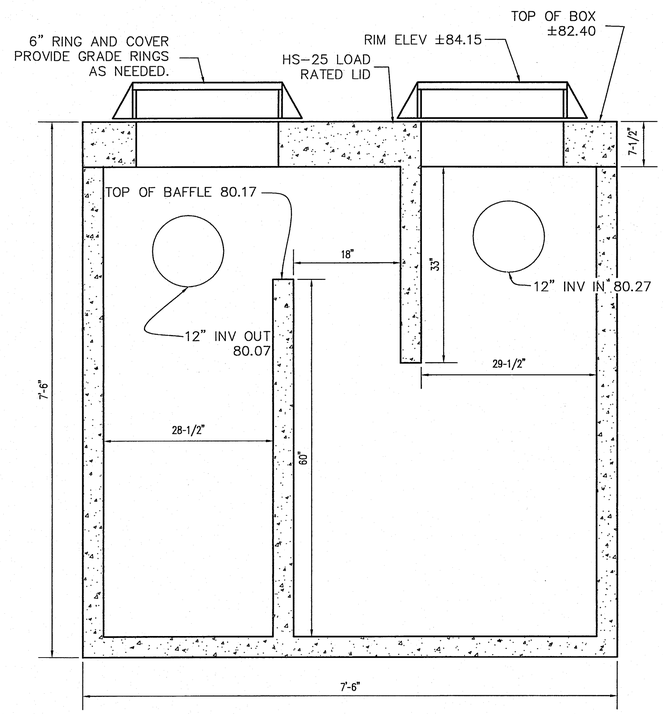

1500 GALLON SAND AND GREASE TRAP

NTS

Quicksilver Subdivision

Kuna, Idaho - Ada County

Detail sheet

REVISIONS

NO.	DESCRIPTION OF CHANGE	BY	DATE
1	CHANGE INVERT ON 1500 GALLON S&G	CSK	7-1-03
2	ADD WATER MAIN CONFLICT DETAIL PER DEQ COMMENTS	CSK	8/22/03

INTAIL SUBMITTAL DATE: 6-17-03

CK Engineering, Inc.
3350 Americana Terrace
Suite 140
Boise, ID 83706

PROFESSIONAL ENGINEER REGISTERED 8-26-03 9412 DAVID S. KIRKEBY

SCALE:
NONE

Sheet
6