- ART ROSS SUBDIVISION -
BY ELDORADO DEVELOPMENT

LOCATED IN THE CITY OF KUNA, ADA COUNTY, STATE OF IDAHO

LEGEND

EP	EXISTING EDGE OF PAVEMENT
EG	EDGE OF GRAVEL
X	EXISTING FENCE LINE
FO	EXISTING FIBER OPTICS
G	EXISTING GAS
OP	EXISTING OVERHEAD POWER
UP	EXISTING UNDERGROUND POWER
S	EXISTING SEWER
SD	EXISTING STORM DRAIN
T	EXISTING TELEPHONE
W	EXISTING WATER
GIR	EXISTING GRAVITY IRRIGATION
PIR	EXISTING PRESSURE IRRIGATION
2603	EXISTING CONTOUR GRADE
	EXISTING VEGITATION
	EXISTING OVERHEAD POWER
	EXISTING DITCH/SWALE FLOWLINE
	FOUND EXISTING BRASS CAP
	FOUND EXISTING PIN
	SET 5/8" IRON PIN
34	LOT NUMBER
	PHASE LINE
	RIGHT-OF-WAY LINE
	LOT LINE
	CENTER LINE
	PROPOSED ROLLED CURB
	PROPOSED VERTICAL CURB
	PROPOSED EDGE OF PAVEMENT
	PROPOSED SAWCUT LINE
W	PROPOSED CULINARY WATER
	PROPOSED SANITARY SEWER
	PROPOSED STORM DRAIN
	PROPOSED PRESSURE IRRIGATION
	PROPOSED UTILITY MANHOLE
	PROPOSED FIRE HYDRANT
	PROPOSED 100 WATT HIGH PRESSURE SODIUM STREET LIGHT (UNLESS NOTED OTHERWISE)
	PROPOSED MAIL BOX LOCATION
10.00 TVC	TOP BACK OF VERTICAL CURB
10.00 TRC	TOP BACK OF ROLLED CURB
10.00 TRLC	TOP BACK OF REVERSE LIP CURB
10.00 TTC	TOP OF TACK ON CURB
10.00 FG	FINISHED GRADE
10.00 XG	EXISTING GRADE
10.00 PV	TOP OF PAVEMENT
10.00 FL	FLOW LINE
10.00 LP	LOW POINT
10.00 DR	(AREA) DRAIN
GB	GRADE BREAK
GC	GRADE CHANGE
HP	HIGH POINT
LP	LOW POINT
PVI	POINT OF VERTICAL INTERSECT
AD	ALGEBRAIC DIFFERENCE
	SEEPAGE TRENCH MONITORING WELL

SHEET INDEX

SHT. No.	DESCRIPTION
1	COVER AND LEGEND
2	GENERAL NOTES
3	FINAL PLAT
4	SITE GRADING & SITE UTILITY PLAN
5	PARKING LOT GRADING & DETAILS
6	PLAN & PROFILE - N. ROSS PLACE & W. ART STREET
7	GRAVITY IRRIGATION DETAILS
8	STORM DRAINAGE DETAILS (SHEET 1 OF 2)
9	STORM DRAINAGE DETAILS (SHEET 2 OF 2)
10	PRESSURE IRRIGATION PLAN

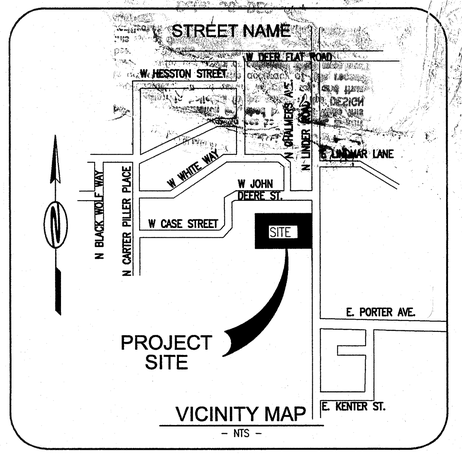

VICINITY MAP
- NTS -

Stanley Consultants INC.
A Stanley Group Company
Engineering, Environmental and Construction Services - Worldwide
701 S. Allen Street, Ste. 110
Meridian, ID 83642
Ph: (208) 288-0573
Fax: (208) 288-0574

PROFESSIONAL ENGINEER REGISTERED 10683 STATE OF IDAHO W. SCOTT WONDERS

REVISION	DATE	INITIALS	DESCRIPTION
△			

RECORD DRAWING

ART ROSSS SUBDIVISION

COVER AND LEGEND

DESIGNED BY: IC | CHECKED BY: WSW | VERSION No.: 2 - 4/7/05
DRAWN BY: IC | SCI PROJECT No.: 18054

01

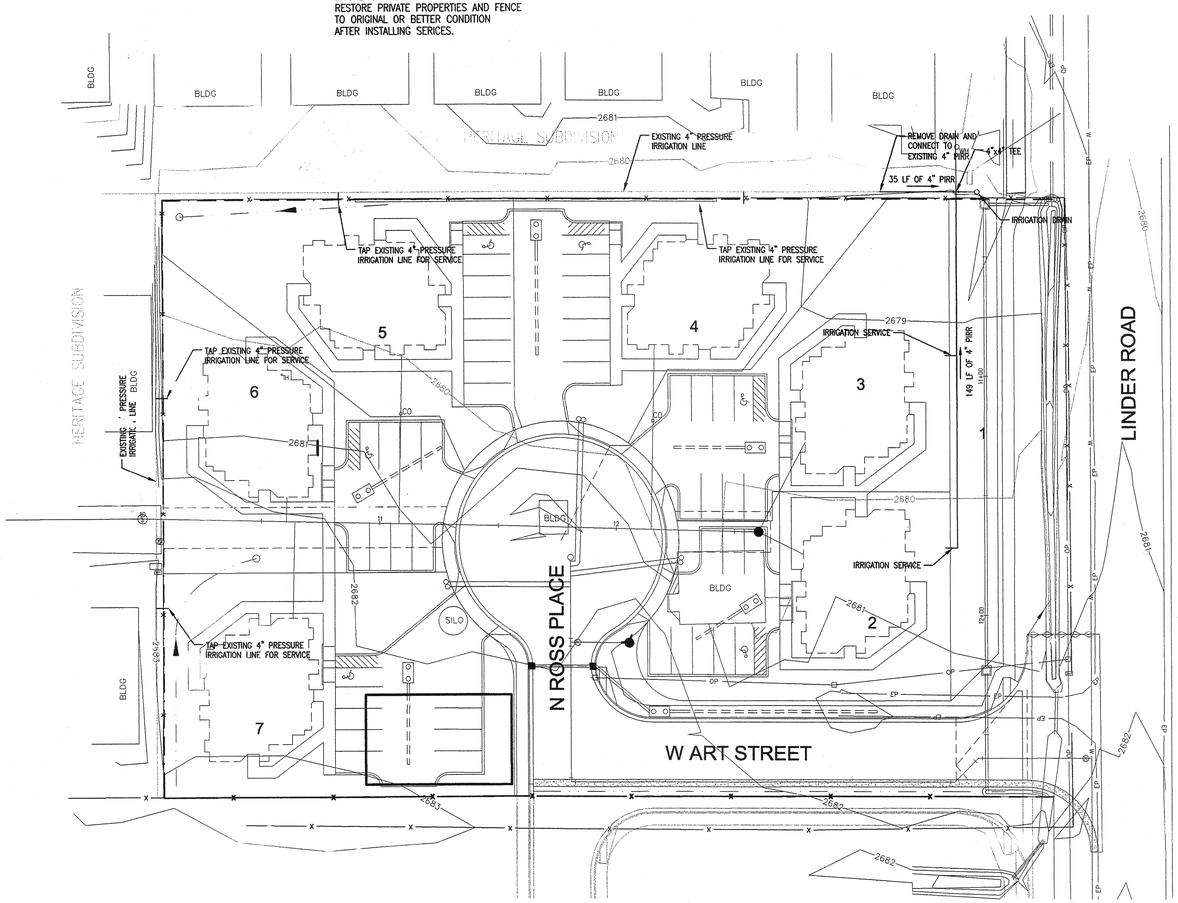

SCALE IN INCHES

1" = 30'

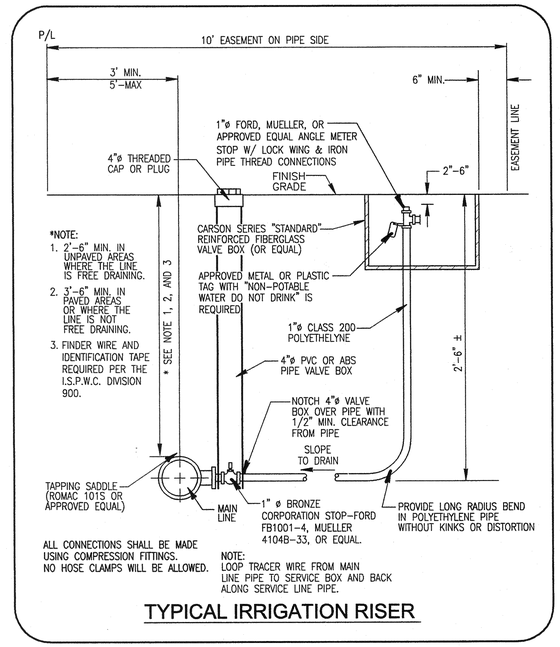

TYPICAL IRRIGATION RISER

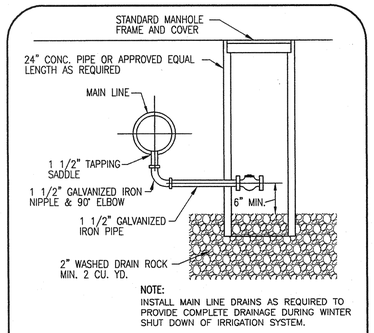

PRESSURE IRRIGATION DRAIN

-NTS-

Stanley Consultants INC.
A Stanley Group Company
Engineering, Environmental and Construction Services - Worldwide
701 S. Allen Street, Ste. 110
Meridian, ID 83642
Ph: (208) 288-0573
Fax: (208) 288-0574

PROFESSIONAL ENGINEER REGISTERED 10683 STATE OF IDAHO W. SCOTT WONDERS

REVISION	DATE	INITIALS	DESCRIPTION
1			

RECORD DRAWING

ART ROSS SUBDIVISION

PRESSURE IRRIGATION PLAN

DESIGNED BY: IC | CHECKED BY: WSW | VERSION No.: 2 - 4/7/05
DRAWN BY: IC | SCI PROJECT No.: 18054

10

10 OF 10

Q:\18054\04-Eng\02-Dwg\Record\10-18054-PIRR.dwg Dec 21, 2005 - 11:20am